Copperhead™ FS-790

ProHD

Camera-Mounted ENG/EFP Fiber Optic Transceiver System for JVC GY-HM790HD Camcorder

User Manual

Systems

FS-790PNACG FS-790PNARG FS-790PNVCG FS-790PNVRG
FS-790PSACG FS-790PSARG FS-790PSVCG F-790PSVRG
FS-790TNCG FS-790TNRG

Camera Units

KA-F790NG KA-F790SG

Base Stations

RM-790PNG RM-790PSG RM-790TNG

Power Wafers

KA-PW790AG KA-PW790VG

External MPS Power Supplies

CH3-MPS-95VD-2ST-NEU CH3-MPS-95VD-2ST-304
CH3-MPS-95VD-NEU-NEU CH3-MPS-95VD-NEU-304

Grass Valley Technologies
3499 Douglas B. - Floreani
Montreal, QC H4S 2C6
Tel: 514-333-2102
www.grassvalley.com

Table of Contents

ABOUT THIS USER GUIDE 7

CHAPTER 1. IMPORTANT INFORMATION 9

1.1. Warranty 9

1.2. Safety and Fiber Optic Systems 10
Optical Fiber Safety 10
Power Fuses 10

Unpacking and the Copperhead FS-790 Transceiver System 11

1.3. Product Returns 12

CHAPTER 2. – SYSTEM OVERVIEW 13

2.1. Fiber Cable Concepts 14
Fiber Optic Cable 14
Fiber Optic Connector Types 15

2.2. Copperhead FS-790 Transceiver System concepts 16

2.3. Signal paths in the Copperhead FS-790 Transceiver System 17

2.4. Copperhead FS-790 Transceiver System Components 18
Copperhead KA-F790 Camera Unit Overview 18
Copperhead RM-790 Base Station 18
Copperhead FS-790 Transceiver System Additional Components 19

CHAPTER 3. INSTALLATION OF THE COPPERHEAD KA-F790 CAMERA UNIT ON THE JVC PROHD GY-HM790 VIDEO CAMERA 21

3.1. Initial Installation of the Copperhead KA-F790 Camera Unit to the Camera 21
Verification of All Components 22
Relocation of the Battery Adaptor from the Camera to the KA-F790 Camera Unit 23
Installation Of The Camera Unit Mounting Plate On To The Camera 25
Installation of the Connector Adaptor Plate And Connection Of Required Cables 26
Mounting Of the Camera Unit On To the Mounting Plate 27
Operational Test of the Installed System 27

3.2. Mounting Power Wafer Unit to the Copperhead KA-F790 Camera Unit 28

3.3. Relocation of the Copperhead RM-790 Base Station fiber connector 29

CHAPTER 4. COPPERHEAD FS-790 TRANSCEIVER SYSTEM DETAILED DESCRIPTION 31

4.1. Copperhead KA-F790 Camera Unit 31
Copperhead KA-F790 Camera Unit Connector Area –Connectors 32
Copperhead KA-F790 Camera Unit Indicator and Control Panel 35

4.2. Copperhead FS-790 Base Station 37
Copperhead FS-790 Base Station Front Panel 37
Copperhead RM-790 Base Station Front Panel – Identifying Controls & Connectors 37
Copperhead RM-790 Base Station Back Panel 41
Copperhead RM-790 Base Station Front Panel – Identifying Controls & Connectors 41
External Power Options 41
Internal Power Options 42

4.3. Additional Copperhead FS-790 Transceiver System Items 44
"Power Wafer" Camera Adaptor 45
MPS External Power Wafer Power Supply 46

CHAPTER 5. CONNECTION OF THE COPPERHEAD FS-790 TRANSCEIVER SYSTEM 48

5.1. Connections between the Copperhead RM-790 Base Station and the KA-F790 Camera Unit 48
Tactical Fiber between the Base Station and Camera Unit 49
SMPTE Hybrid Fiber between the Base Station (powered) and Camera Unit 50
SMPTE Hybrid Fiber between Base Station and Camera Unit (Infrastructure Wiring) 51
SMPTE Hybrid Fiber between the MPS Power Unit and Camera Unit 52

5.2. Connections to the Copperhead RM-790 Base Station 53
Multi-Pin Cable Assemblies Used with the Copperhead FS-790 Base Station 53
Connectors into and out of the Copperhead FS-790 Base Station 54

5.3. Connections to the Copperhead FS-790 Camera Unit 56
Connectors into and out of the Copperhead FS-790 Camera Unit Back Side 56

5.4. Camera Unit Connection Example 58
Camera Unit (Camera Facing Side) to Camera Connections 58

CHAPTER 6. OPERATION OF THE COPPERHEAD FS-790 TRANSCEIVER SYSTEM.....60

6.1. Set Up of the Copperhead FS-790 Transceiver System for operation 61

6.2. Connecting and Managing the Fiber Cable 62
Planning the Fiber Cable Route 62
Running the Fiber Cable 63

6.3. Powering the System 65
Powering the Copperhead FS-790 Base Station 65
Powering the Copperhead FS-790 Camera Unit 65

6.4. Intercom **66**

6.5. Using the Digital Displays **68**
A Brief Guide to Measurement of Fiber Optic Signal Strength 68
The CopperheadFS-790 Base Station Digital Display 68

6.6. Standard Operation **72**

6.7. Shutting Down the System **73**

6.8. Troubleshooting **74**

APPENDICES **75**

APPENDIX 1. CONNECTOR PIN ASSIGNMENTS **75**

1.1. Copperhead FS-790 Base Station Connectors **75**
Camera Remote – Base Station DB9 Connector -Wiring 75
Tally/GPI/Data – Base Station DB15 Connector Wiring 75
Base Station Audio Inputs & Outputs Connector Wiring 76
Power Connector – Base Station 4 Pin XLR Connector Wiring 76
Power Connector – Base Station Fused AC Receptacle 76
Base Station 12VDC Terminal Block Wiring 77

1.2. Copperhead FS-790 Camera Unit Multi-Pin Connectors **78**
Power Wafer – Camera Unit 4 Pin Lemo Connector Wiring 78
Camera Headset – Camera Unit 5 Pin XLR Female Connector Wiring 78
Audio Out 78

APPENDIX 2. BASE STATION REMOTE CONTROL CABLE **79**

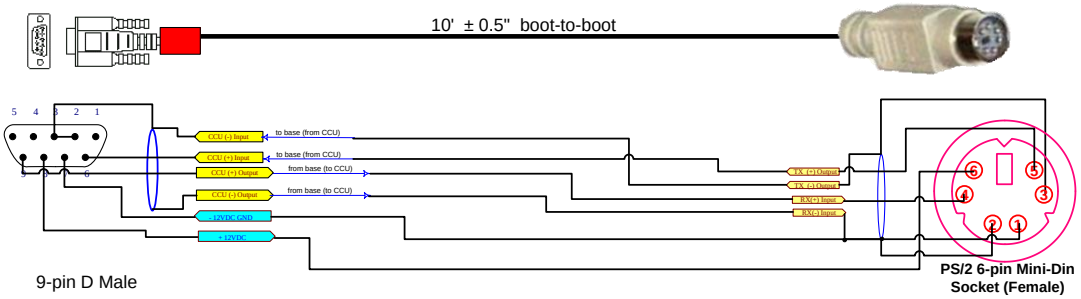

9-pin D Male

1	CCU (-) Input	1
2	CCU Format Select	2
3	Ground (CCU shields)	3
4	+12VDC Bias (for CCU Format Select only)	4
5	CCU (-) Output	5
6	CCU (+) Input or Bi-directional CCU I/O	6
7	12VDC CCU Power - Ground	7
8	+12VDC CCU Power	8
9	CCU (+) Output	9

6-pin Mini DIN Female

1	SIGNAL GND	
2	REMOTE/LOCAL (detect of *HOST*)	Bring to TTL "LOW" to control camera
3	SIGNAL GND	
4	SID RX DATA	
5	SID TX DATA	
6	9 VDC IN (+)	

RM-LP25

RM-LP55

RM-LP57

.....79

APPENDIX 3. AUDIO CABLE WIRING SUGGESTIONS.....80

Copperhead FS-790 Base Station 25-Pin Audio Input Cable 80

Copperhead FS-790 Base Station 25-Pin Audio Output Cable 80

APPENDIX 4. SPECIFICATION 81

APPENDIX 5. DECLARATION OF CONFORMITY 82

APPENDIX 6. COPPERHEAD FS-790 SYSTEM OVERVIEW DIAGRAMS.....84

List of Main Figures

FIGURE 1 - TACTICAL FIBER OPTIC CABLE CROSS-SECTION (ILLUSTRATIVE ONLY) 14
FIGURE 2 - HYBRID FIBER OPTIC CABLE CROSS-SECTION (ILLUSTRATIVE ONLY) 14
FIGURE 3 - FIBER OPTIC CONNECTORS 15
FIGURE 4- BASE STATION TO CAMERA UNIT CONNECTION 17
FIGURE 5 - CAMERA UNIT: CONNECTOR PANELS 18
FIGURE 6 – CAMERA UNIT: INDICATOR AND INTERCOM LEVEL CONTROL PANEL 18
FIGURE 7 - BASE STATION: FRONT INDICATOR PANEL 18
FIGURE 8 - BASE STATION: REAR CONNECTOR PANEL 18
FIGURE 9 - MOUNTING THE POWER WAFER UNIT TO THE COPPERHEAD FS-790 CAMERA UNIT 28
FIGURE 10 - CONNECTING THE POWER WAFER 28
FIGURE 11 - COPPERHEAD RM-790 BASE STATION WITH REAR MOUNTED FIBER CONNECTOR 29
FIGURE 12 - COPPERHEAD RM-790 BASE STATION WITH FRONT MOUNTED FIBER CONNECTOR 29
FIGURE 13 - COPPERHEAD FS-790 CAMERA UNIT BACK SIDE 31
FIGURE 14 - COPPERHEAD FS-790 BASE STATION FRONT PANEL 37
FIGURE 15 - FIBER CONNECTOR TYPES 37
FIGURE 16 - COPPERHEAD RM-790 BASE STATION BACK PANEL (POWERED VERSION) 41
FIGURE 17 - MPS EXTERNAL POWER WAFER POWER SUPPLY 46
FIGURE 18 - TACTICAL FIBER BETWEEN THE BASE STATION AND CAMERA UNIT 49
FIGURE 19 - SMPTE HYBRID FIBER BETWEEN THE BASE STATION (POWERED) AND CAMERA UNIT 50
FIGURE 20 - SMPTE HYBRID FIBER BETWEEN BASE STATION AND CAMERA UNIT (INFRASTRUCTURE WIRING) 51
FIGURE 21 - SMPTE HYBRID FIBER BETWEEN THE MPS POWER UNIT AND CAMERA UNIT 52
FIGURE 22 - COPPERHEAD FS-790 BASE UNIT CONNECTIONS 53
FIGURE 23 - COPPERHEAD FS-790 CAMERA UNIT BACK SIDE CONNECTIONS 56
FIGURE 24 - CAMERA UNIT (CAMERA FACING SIDE) TO CAMERA CONNECTIONS 58
FIGURE 25 - COPPERHEAD JVC FP-790 SERIES BASE STATION REMOTE CABLE 79
FIGURE 27 - COPPERHEAD FS-790 BASE STATION 25-PIN AUDIO OUTPUT CABLE 80
FIGURE 28 - COPPERHEAD FS-790 BASE STATION REAR PANEL 84
FIGURE 29 - COPPERHEAD FS-790 CAMERA UNIT CONNECTORS 84
FIGURE 31 - COPPERHEAD FS-790 BASE STATION FRONT PANEL 86
FIGURE 30 - COPPERHEAD FS-790 CAMERA UNIT INDICATORS AND CONTROLS 86

List of Tables

TABLE 1 - WHAT IS SHIPPED WITH A COPPERHEAD FS-790 SYSTEM 11
TABLE 2 - FIBER OPTIC CONNECTOR TYPES & USAGE 15
TABLE 3 - MPS POWER SUPPLY ADAPTOR OPTIONS 46
TABLE 4 - COPPERHEAD FS-790 POWER OPTIONS 48
TABLE 5 - BASE STATION CAMERA REMOTE CONNECTOR WIRING 75
TABLE 6 - BASE STATION TALLY/GPI CONNECTOR WIRING 75
TABLE 7 - BASE STATION AUDIO 25 PIN CONNECTOR WIRING 76
TABLE 8 - BASE STATION POWER CONNECTOR WIRING 76
TABLE 9 - BASE STATION 12VDC TERMINAL BLOCK WIRING 77
TABLE 10 - BASE STATION CLEAR-COM INTERCOM OUTPUT WIRING ..... **ERROR! BOOKMARK NOT DEFINED.**
TABLE 11 - BASE STATION RTS INTERCOM OUTPUT WIRING ..... **ERROR! BOOKMARK NOT DEFINED.**
TABLE 12 - CAMERA UNIT POWER WAFER CONNECTOR WIRING 78
TABLE 13 - CAMERA UNIT HEADSET CONNECTOR WIRING 78
TABLE 14 - STANDARD XLR3 AUDIO CONNECTOR WIRING 78

About this User Guide

The Copperhead RM-790 Fiber Optic Transceiver System can be delivered in a number of configurations depending on the Power and Battery Mount options selected. This user guide is designed to cover all of the various options and so not every page in this guide will apply to your specific system.

Throughout this guide a number of informational pointers are used to mark important or useful information.

	Caution – the information provided is important safety information and should be understood and followed in order to operate the Copperhead FS-790 Fiber Optic Transceiver System safely and properly.
	Useful information regarding the User Guide and the Copperhead FS-790 Fiber Optic Transceiver System. Reading and understanding this information will make using the manual and the product easier.

Page Intentionally Left Blank

Chapter 1. Important Information

1.1. Warranty

LIMITED WARRANTY STATEMENT

Grass Valley, Inc. ("Grass Valley") expressly warrants to Buyer that the Products supplied shall be free from defects in materials and workmanship for a period of 12 months following the date the Products are delivered to Buyer (the "Warranty Period"). Grass Valley's liability under this limited warranty shall be limited, at its option, to providing refund of purchase price for Products, or replacing or repairing Products shown to be defective either in materials or workmanship. Buyer's sole and exclusive remedy for breach of warranty shall be such refund, replacement or repair.

A claim of defect in materials or workmanship in any Product shall be allowed only when it is submitted in writing to Grass Valley, Inc. within seven days after discovery of the defect, and in any event within the Warranty Period. No claim shall be allowed in respect of any Product which has been altered, neglected, damaged or stored in any manner which adversely affects it. In order to obtain service under the terms of this warranty, Distributor's customer or Distributor must notify Grass Valley of the defect prior to the expiration of the applicable warranty period and obtain a Return Authorization Number from Grass Valley. In no event may products be returned to Grass Valley or to Distributor for warranty service without having obtained from Grass Valley a Return Authorization Number.

This limited warranty applies only to new and unused Products delivered to Buyers located within the United States of America, or to international Buyers if sold through an authorized Distributor organization, and shall not extend to any equipment not manufactured by Grass Valley, Inc., even though such equipment may be sold or operated with the Products. In addition, this limited warranty shall be void and of no further force or effect whatsoever if the Product is repaired or modified by any person other than an authorized representative of Grass Valley, Inc. without the consent of Grass Valley, Inc. This warranty shall not apply to any defect, failure or damage caused by improper use or inadequate maintenance and care. Nor shall this warranty apply to any damage caused in whole or in part by attempts by personnel other than Grass Valley's personnel, as approved in advance in accordance with the foregoing provisions, to open, install, repair, or service the Product; nor to damage resulting from improper connection with incompatible equipment; nor to damage to a unit which has been modified by personnel other than Grass Valley personnel.

Products returned to Grass Valley for warranty service shall be shipped, freight prepaid to Grass Valley. Grass Valley will return the repaired product or ship a replacement, freight prepaid, to either Distributor or Distributor's customer, as requested by Distributor's customer, at a location within the United States or, at Grass Valley's option, to Distributor's location in the case of international sales. This limited warranty shall also apply to Products that replace defective Products and Products that have been repaired by authorized representatives of Grass Valley, Inc., but only for the original Warranty Period. The Warranty Period shall not be extended by reason of defect, or any period of time during which the Product is not available to Buyer because of defects or repairs, without the express written consent of Grass Valley, Inc.

EXCEPT FOR THE EXPRESS LIMITED WARRANTY AGAINST DEFECTS IN MATERIALS AND WORKMANSHIP CONTAINED HEREIN, GRASS VALLEY, INC. MAKES NO WARRANTY OF ANY KIND WHATSOEVER, EXPRESS OR IMPLIED, AND ALL WARRANTIES OF MERCHANTABILITY, FITNESS FOR A PARTICULAR PURPOSE, AND OTHER WARRANTIES OF WHATEVER KIND ARE HEREBY DISCLAIMED BY GRASS VALLEY, INC. THIS LIMITED WARRANTY SETS FORTH EXCLUSIVELY ALL OF GRASS VALLEY, INC.'S LIABILITY IN CONTRACT OR OTHERWISE IN THE EVENT OF A DEFECTIVE PRODUCT. WITHOUT LIMITATION ON THE FOREGOING, GRASS VALLEY, INC. EXPRESSLY DISCLAIMS ANY LIABILITY WHATSOEVER FOR ANY DAMAGES INCURRED DIRECTLY OR INDIRECTLY IN CONNECTION WITH THE SALE OR USE OF, OR OTHERWISE IN CONNECTION WITH, THE PRODUCT, INCLUDING WITHOUT LIMITATION, LOSS OF PROFITS AND SPECIAL, INCIDENTAL OR CONSEQUENTIAL DAMAGES, WHETHER CAUSED BY NEGLIGENCE OR OTHERWISE, REGARDLESS WHETHER GRASS VALLEY HAS BEEN GIVEN ADVANCE NOTICE OF THE POSSIBILITY THEREOF

THIS WARRANTY IS GIVEN BY GRASS VALLEY IN LIEU OF ANY OTHER WARRANTY EXPRESSED OR IMPLIED.

1.2. Safety and Fiber Optic Systems

Optical Fiber Safety

Never look directly into the end of the optical fiber while either end of the system is operating. Eye damage can result.

Always use dust caps on fiber optic connectors when cables are not connected. This protects the connector from damage and the unlikely event of accidental exposure of a human eye to an operating laser. Keeping the caps in place when the connectors are not in use will also prevent dirt and dust from entering the connector and degrading the performance of the optical link

Power Fuses

The Copperhead RM-790PNG and RM-790PSG Powered Base Stations are equipped with Dual Cartridge fuses located next to the AC Power receptacle at the left rear of the unit. Refer to Page 76 for specific fuse and location information.

NEVER operate the Copperhead RM-790P Powered Base Station without properly installed and rated fuses. Severe electrical and heat damage could result as well as personal injury or death.

1.3. Unpacking and the Copperhead FS-790 Transceiver System

The following table lists the various items shipped with a system depending on the particular configuration.

Unpowered System, Tactical Fiber, OpticalCON Connectors	
System Model:	**FS-790TNG**
Copperhead Camera Unit:	**KA-F790NG**
Copperhead Base Station:	**RM-790TNG**
Base Station Remote Cable:	**VC-P790RMG**
12VDC power supply:	**AA-FP790G**

Powered System, Hybrid Fiber, OpticalCON Connectors		
System Model:	**FS-790PNAG**	**FS-790PNVG**
Copperhead Camera Unit:	**KA-F790NG**	
Power Wafer:	**KA-PW790AG**	**KA-PW790VG**
Copperhead Base Station:	**RM-790PNG**	
Base Station Remote Cable:	**VC-P790RMG**	

Powered System, Hybrid Fiber, SMPTE 304M Connectors		
System Model:	**FS-790PSAG**	**FS-790PSVG**
Copperhead Camera Unit:	**KA-F790SG**	
Power Wafer:	**KA-PW790AG**	**KA-PW790VG**
Copperhead Base Station:	**RM-790PSG**	
Base Station Remote Cable:	**VC-P790RMG**	

Table 1 - What is shipped with a Copperhead FS-790 System

Please consult your packing slip and purchase order to insure that you have received all of the expected Grass Valley components.

Inspect all components for scratches and other mechanical damage, and inspect the electrical connectors for bent or damaged pins and latches. Report any missing or damaged components to Grass Valley, Inc. See the following section regarding product returns.

You must use your own cables to make connections for Tally, Base Station audio, and other ancillary signals and equipment. Suggestions for these cables are discussed later in this document.

Leave the protective caps on the optical connectors whenever the fiber is disconnected.

1.4. Product Returns

In the unlikely event of damage to your Copperhead FS-790 Fiber Optic Transceiver System during shipping or delivery please note the damage with the delivery or shipping service and document the packaging and product where you see damage. If any component does not work correctly out of the box please contact your JVC sales organization.

If the problem cannot be remedied through a service telephone call an RMA (Return of Merchandise Authorization) will be issued and you will receive an RMA number. Please note this RMA number inside and outside of all shipping boxes and on all documentation provided with the items to be returned.

Chapter 2. System Overview

This chapter covers the following:

2.1 Fiber Optic Cable Concepts

2.2 Copperhead FS-790 Transceiver System concepts

2.3 Signal paths in the Copperhead FS-790 Transceiver System

2.4 Copperhead FS-790 Transceiver System Components

2.1. Fiber Cable Concepts

Fiber Optics and Fiber Optic Cable are the core technologies at the heart of the Grass Valley Copperhead FS-790 Transceiver System. The ability to multiplex and de-multiplex a variety of video, audio and data signals so that they can be carried over a thin strand of Fiber Optic cable for long distances enables the Copperhead System. The theory and operation of Fiber Optics is beyond the scope of this document. What is important for the end user to be aware of are the different types of Fiber Optic Cable and Fiber Optic Cable Connectors.

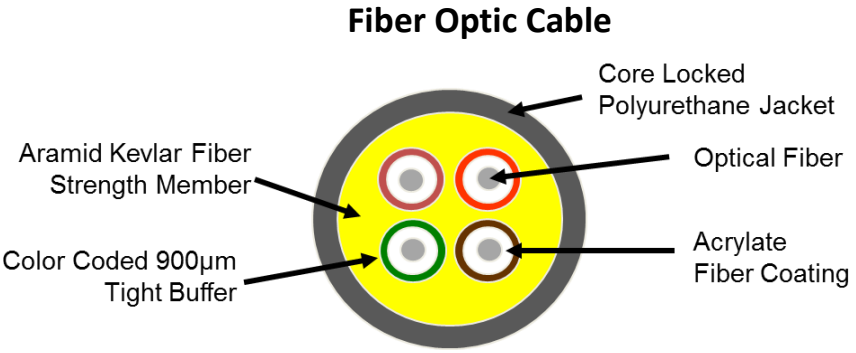

Figure 1 - Tactical Fiber Optic Cable Cross-section (Illustrative only)

Tactical Fiber cable is heavy duty, Kevlar protected and capable of carrying Copperhead signals extended distances. The cable can generally withstand a variety of environmental hazards such as being crushed or run-over. Tactical Fiber can be used in the field mounted on Portable Fiber Reels in lengths up to 2000 feet.

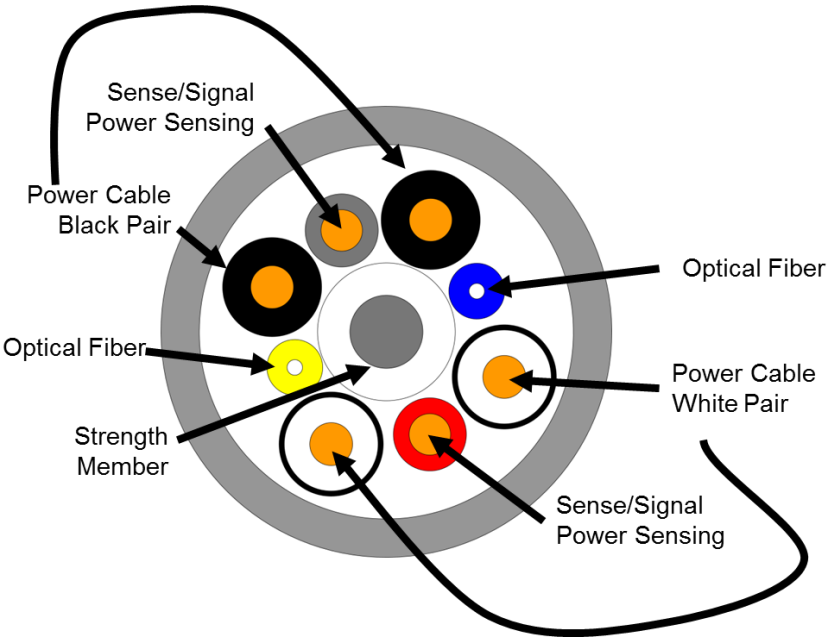

Figure 2 - Hybrid Fiber Optic Cable Cross-section (Illustrative only)

Hybrid Fiber Cable has the same Fiber Optic characteristics with the addition of copper cables. This allows the transmission of power through the cable. This increases weight and reduces operating distance. Hybrid Fiber Cable also includes a pair of Sense/Signal wires that allow systems to determine if there is an open or shorted cable. Hybrid Fiber Cable is also larger in diameter then Tactical Fiber Cable

Fiber Optic Connector Types

Depending on the type of Fiber Optic Cable used, different Connector types can be configured. The following table summarizes the various types of connectors typically used in a Copperhead FS-790 Transceiver System configuration and the allowed Fiber Optic Cable usage. Each connector type is illustrated below.

Connector Type	Tactical Fiber Use	Hybrid Fiber Use	Camera Unit Use	Base Station Use	Notes
SMPTE 304M	No	Yes	Yes	Yes	
OpticalCON Cable Connector (Neutrik)	Yes	Yes (up to 95V)	Yes	Yes	
OpticalCON Panel Connector (Neutrik)	Yes	Yes	No	No	
ST Fiber Connectors	Yes	Not Typically	No	No	Used with the FP-790 System for infrastructure wiring only
LC Connectors	No	No	No	No	Infrastructure and Internal Equipment Use

Table 2 - Fiber Optic Connector Types & Usage

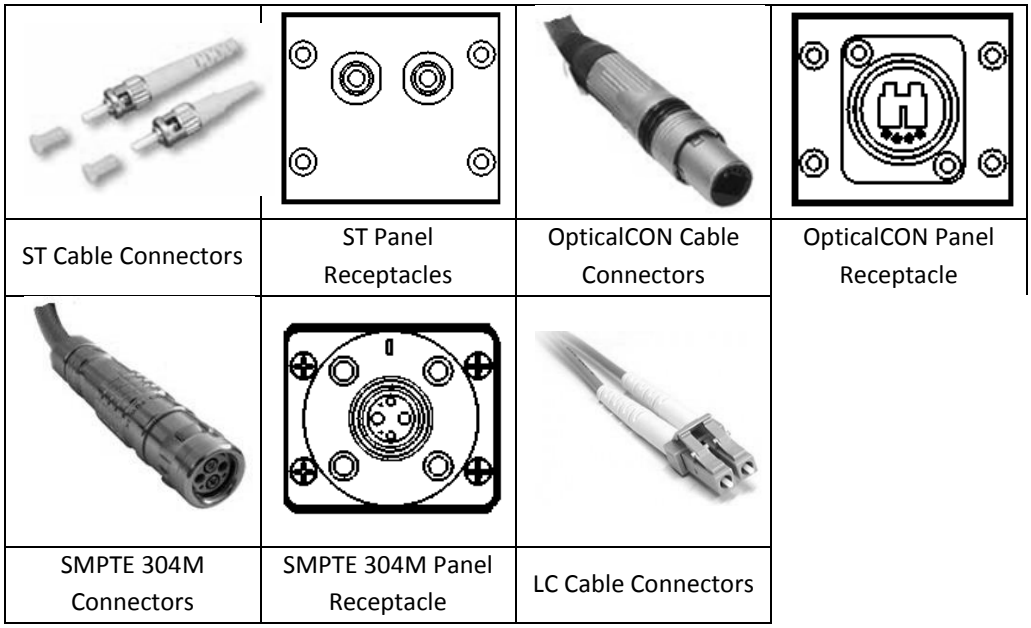

Figure 3 - Fiber Optic Connectors

2.2. Copperhead FS-790 Transceiver System concepts

The Grass Valley Copperhead FS-790 Transceiver System is a camera video, audio and data multiplexing system that installs between the JVC ProHD GY-HM790 video camera and its power source and connects via a single fiber optic cable to a Base Station in a truck, studio control room, or other video production facility. All video, audio and data usually carried on coax or multi-core cable is sent, bi-directionally, over a single lightweight fiber over distances as long as 5 km or more.

The Camera Unit is attached directly to the camera. A battery, battery power adaptor or a Grass Valley Fiber Power Wafer power supply is attached to the Camera Unit. Battery mounts accommodated are the Anton-Bauer and the IDX V-Mount.

The Copperhead FS-790 Transceiver System consists of two main components:

1. The Copperhead FS-790 Camera Unit – this unit has two options: a) the battery physical interface system and b) the fiber connector.

2. The Copperhead FS-790 Base Station – this unit has two options: a) the power configuration, b) the fiber connector

Typically options are determined at the time of product order and the units are delivered pre-configured. Some options can be field changed by qualified personnel. This manual describes each of the possible options.

The unique design of the Copperhead KA-F790 Camera Unit allows for the majority of signal connections between the JVC ProHD GY-HM790 video camera and the Copperhead to be carried over a 68 pin connector internal to the camera and Copperhead Unit.

The signals carried internally between the camera and the Camera Unit are:

- SDI – HD/SDI Camera Video
- VBS (Analog) Camera Video
- VBS Video (Genlock) to Camera
- VBS Video (Return Video) to Camera
- Audio 1 from Camera
- Audio 2 from Camera
- Timecode to and from Camera
- Camera Control
- Camera Tallies (Red and Green)

2.3. Signal paths in the Copperhead FS-790 Transceiver System

The Copperhead FS-790 Transceiver System utilizes an optical fiber link between the Base Station and the Camera Unit to carry all of the required signals necessary for operation of the camera and associated production equipment. The Camera Unit multiplexes electrical signals from the camera and other remote sources and converts them to an optical signal for transmission over the fiber. Simultaneously, an optical return signal is received at the Camera Unit from the Base Station; this signal is then converted to electrical analog information for use by the camera, camera operator, and auxiliary equipment at the camera location.

When the hybrid fiber cable option is used, the link also provides power to the Camera Unit and the camera itself. Only the single fiber link or hybrid fiber link is required between the Base Station and the Camera Unit.

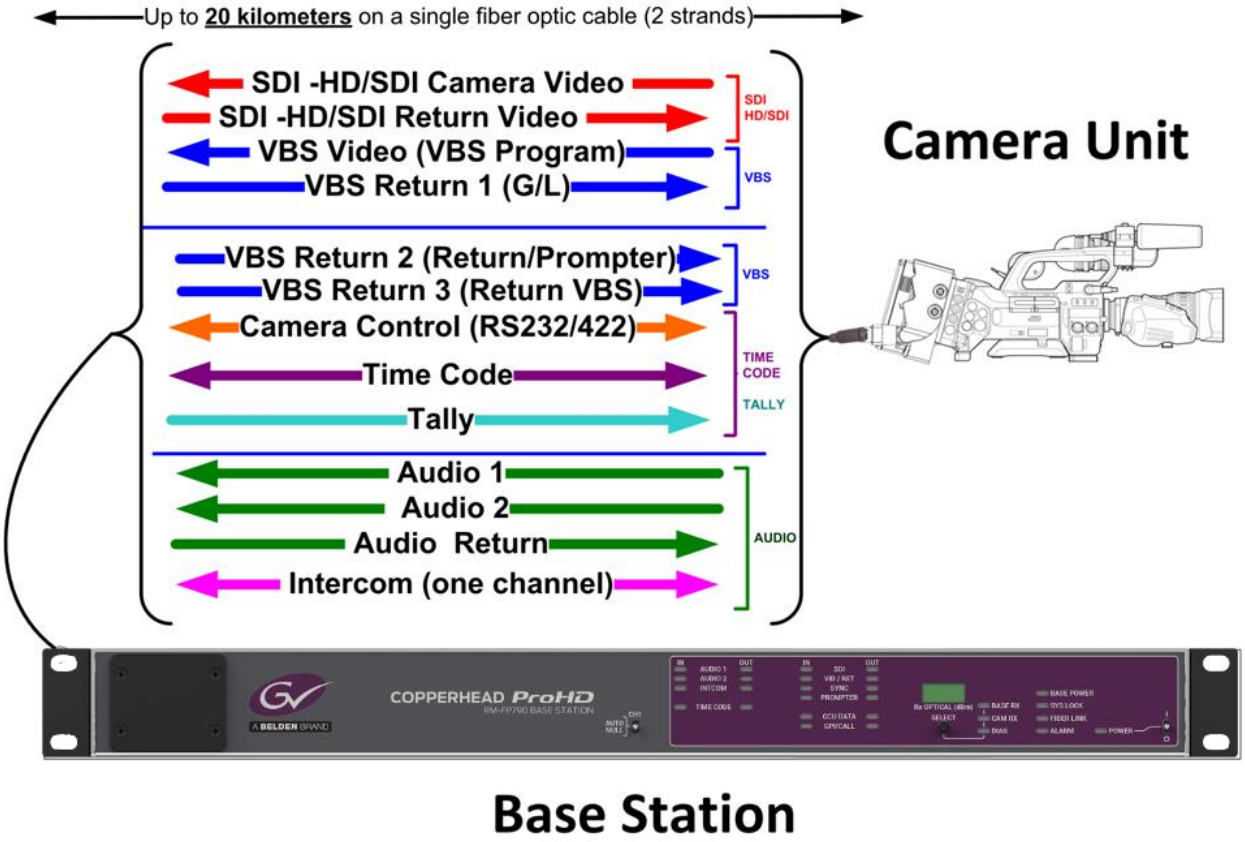

Figure 4- Base Station to Camera Unit Connection

2.4. Copperhead FS-790 Transceiver System Components

Copperhead KA-F790 Camera Unit Overview

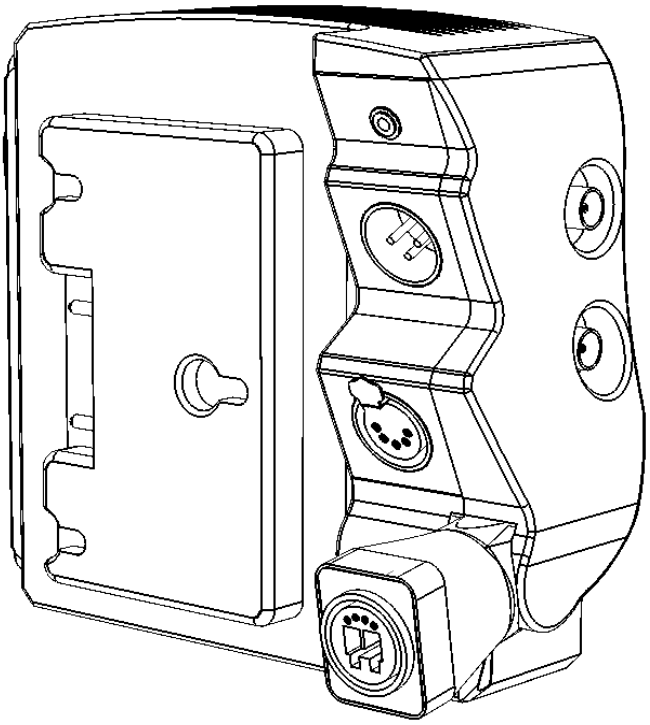

Figure 5 - Camera Unit: Connector Panels

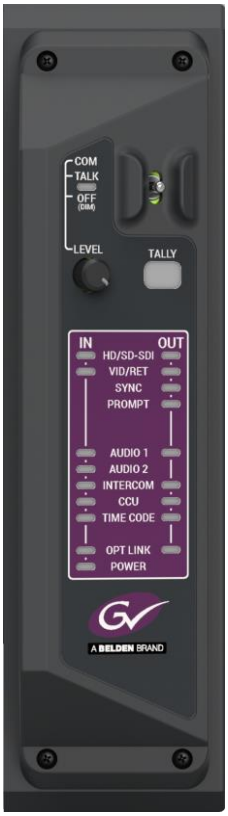

Figure 6 – Camera Unit: Indicator and Intercom Level Control Panel

The actual appearance of your Copperhead KA-F790 Camera Unit will vary depending on the battery mount and fiber cable connection options specified at the time of purchase.

Copperhead RM-790 Base Station

Figure 7 - Base Station: Front Indicator Panel

Figure 8 - Base Station: Rear Connector Panel

The actual appearance of your Copperhead RM-790 Base Station will vary depending on the fiber cable connection and power options specified at the time of purchase.

Copperhead FS-790 Transceiver System Additional Components

In addition to the Copperhead FS-790 Camera Unit and Base Station the system consists of:

1. External Power Supply or Power Cord for the Base Station (depending the unit configuration)
2. Cable Sets as required by your camera and remote controller types to connect the Copperhead Camera Unit to the camera, and to connect the Base Station to the optional remote controller
3. Hardware kits for rack mounting the Base Station
4. Portable fiber reel with fiber per your purchase order
5. Optional "Power Wafer" Camera Adaptor with optional external power supply

Additional JVC accessories for your camera may have been supplied at the time of purchase.

NOTE: You must use your own cables to make connections for Tally, Black Burst/Gen Lock, Base Station monitor, and other ancillary signals and equipment. See Appendices 1 & 2 for suggestions.

Page Intentionally Left Blank

Chapter 3. Installation of the Copperhead KA-F790 Camera Unit on the JVC ProHD GY-HM790 Video Camera

This chapter describes the physical installation of the Copperhead FS-790 Transceiver System. The following areas are covered:

1) Initial Installation of the Copperhead KA-F790 Camera Unit to the camera
2) Mounting of the optional Power Wafer Unit to the Copperhead FS-790 Camera Unit
3) Relocation of the Copperhead FS-790 Base Station Fiber connector from the back panel to the front panel

3.1. Initial Installation of the Copperhead KA-F790 Camera Unit to the Camera

This section describes the physical installation of the Copperhead KA-F790 Camera Unit to the camera. Installation should only be performed by a technically qualified individual. Typically the installation will be performed by the technical staff at your JVC Dealer, System Integrator or a technician on your organization's staff. A qualified and experienced individual should be able to accomplish the installation in about 15 minutes.

The installation encompasses the following steps:

1) Verification of all components
2) Relocation of the Battery Adaptor from the back of the Camera to the KA-F790 Camera Unit
3) Installation of the Camera Unit Mounting Plate on to the camera
4) Installation of the Connector Adaptor Plate and connection of required cables
5) Mounting of the Camera Unit on to the Mounting Plate
6) Operational test of the installed system

You will need a clean flat surface upon which to work and a medium Phillips screwdriver to perform the installation of the Camera Unit on to the Camera.

This User Guide illustrates the installation of a Camera Unit on to a Camera equipped with an Anton Bauer type battery. The V-Mount system installation is identical with the very minor wiring connector differences.

Verification of All Components

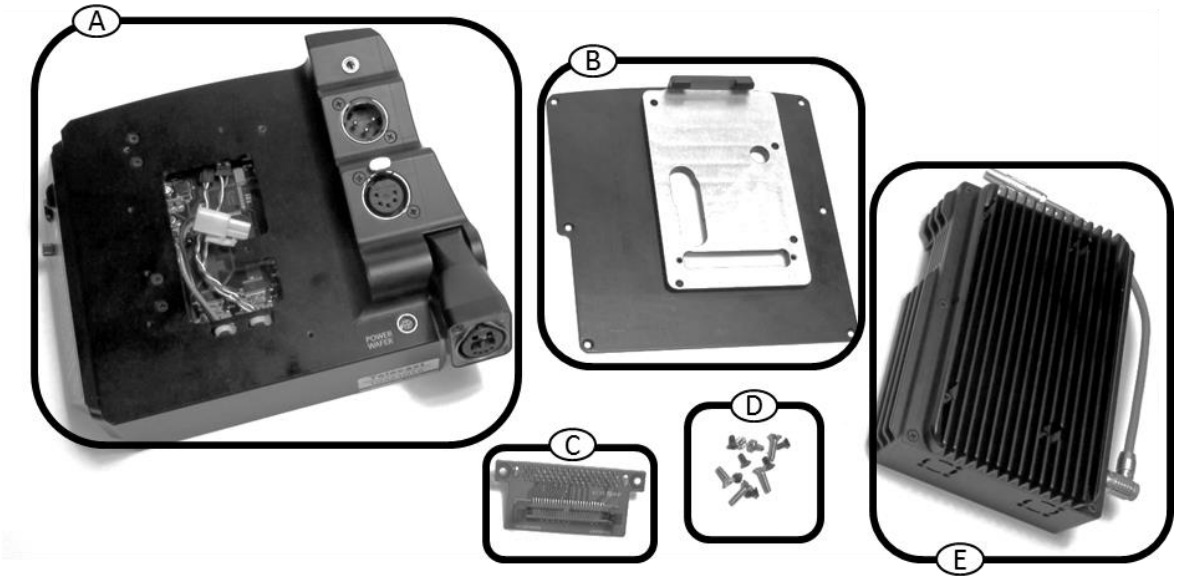

The following items are required for the installation procedure:

A) The Copperhead KA-F790 Camera Unit
B) The Camera Unit Mounting Plate
C) The Connector Adaptor Plate
D) Screw Assortment
    a. 2 Connector Adaptor Plate Screws (with lockwashers)
    b. 6 Mounting Plate to Camera Screws (black Phillips Head)
    c. 4 Camera Unit to Mounting Plate Screws (plated Phillips head)
    d. Note: The screws used to mount the Battery Adaptor to the Camera will be re-used to mount the Battery Adaptor to the Mounting Plate
E) Optional Power Wafer Unit – for Powered Systems only

Insure that all of these items are present before beginning the installation procedure.

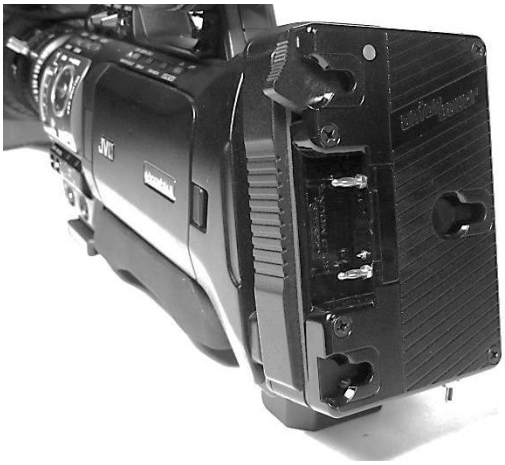

The Camera described in this section is the GY-HM790U equipped with the Anton Bauer battery mount. The GY-HM790E is equipped with the IDX "V-Mount" Battery mount.

Relocation of the Battery Adaptor from the Camera to the KA-F790 Camera Unit

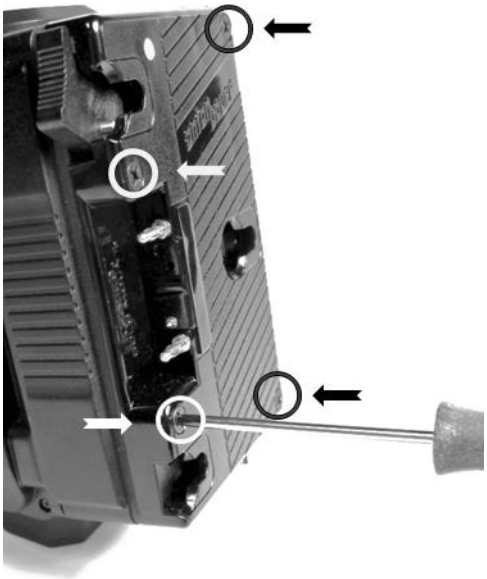

1) Place the camera on a flat surface with the battery mount towards you
2) Remove each of the four retaining screws indicated in the illustration
3) Be careful not to strip these screws during this procedure as they will be needed later
4) Place the screws in a safe place where you can get them in a few minutes
5) Carefully pull the battery mount off of the camera and lay it wiring side up next to the camera. Be careful not to stretch any of the attached wires past their limit

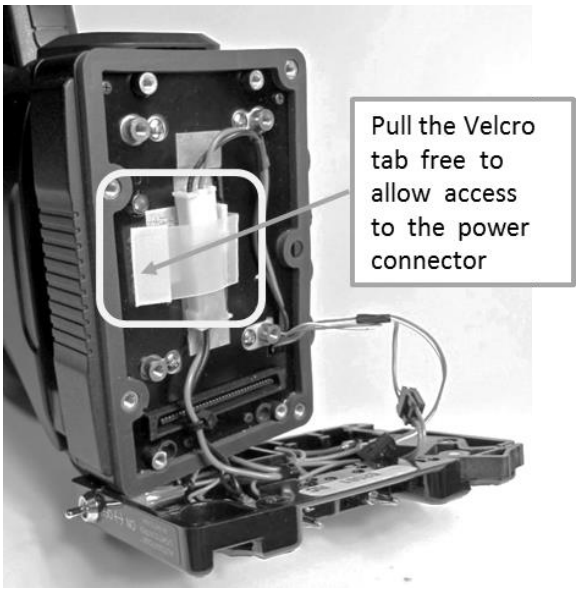

1) Identify the Velcro cable retainer inside the body of the camera
2) Pull the Velcro tab free and carefully pull the internal Power Cable connection free of the camera

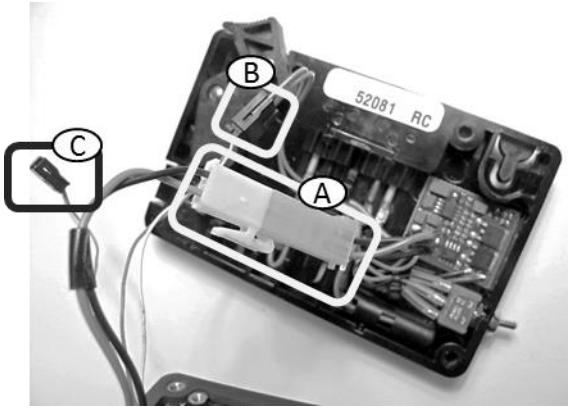

1) Identify three connectors
   a. The white power connector
   b. The black voltage data connector
   c. The black unused connector (not connected to the battery adaptor)
2) Pull the white power connector apart by pushing the connector release tab
3) Slide the black voltage data connector apart
4) Once the two connectors are separated put the camera to one side

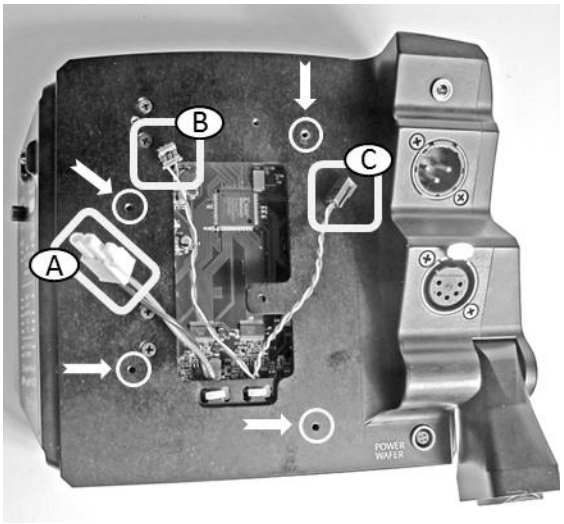

1) Position the Camera Unit on the working surface so that the connectors are positioned as shown in the illustration
2) Identify the 4 screw holes as indicated
3) Position the Battery Mount so that you can access the connectors in the Battery Mount and the Camera Unit
4) Connect (A) the White Power connector
5) Connect (B) the Power Voltage Data Connector
6) Position connector (C) inside the opening of the Camera Unit to that it will not be pinched by the Battery Mount when attached to the Camera Unit. This connector is not used.

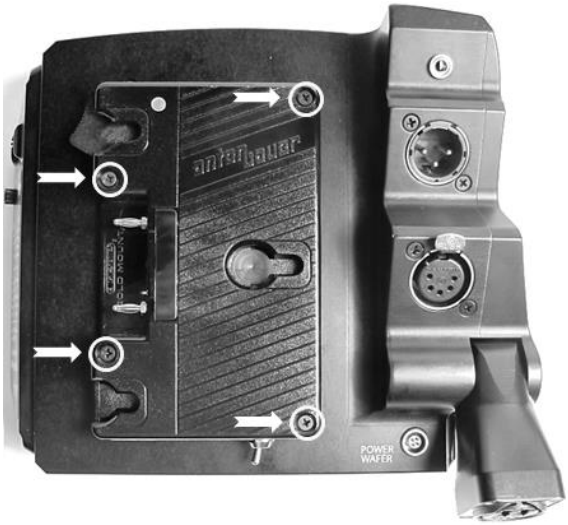

1) Carefully position the two connected wires within the Camera Unit
2) Place the Battery Mount on to the Camera Unit being careful not to pinch any of the wires between the Battery Mount and the Camera Unit
3) Line up the four screw holes between the Battery Mount and the Camera Unit
4) Install the screws you removed in the previous step

Note: For these steps the installation of the IDX “V-Mount” battery adaptor is identical

Installation Of The Camera Unit Mounting Plate On To The Camera

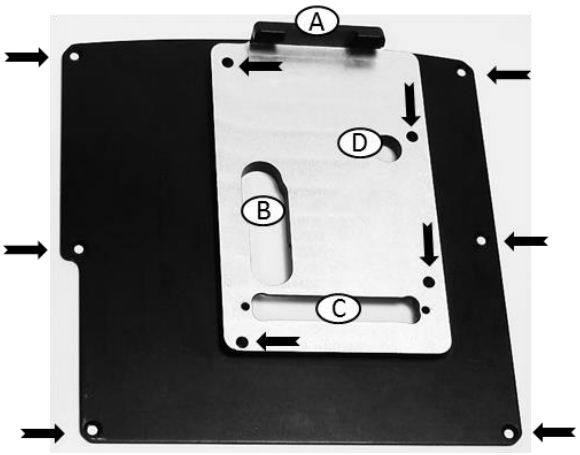

Identify the various features of the Camera Unit Mounting Plate (the camera facing side of the plate is shown in this illustration)

A) Camera plate mounting hooks (for mounting into the Camera accessory mounting slots)
B) Connector wire cutout
C) Connector Adaptor Plate cutout
D) Video Connector Cutout

Six Mounting Plate to Camera screw holes

Four Camera Unit to Mounting Plate screw holes

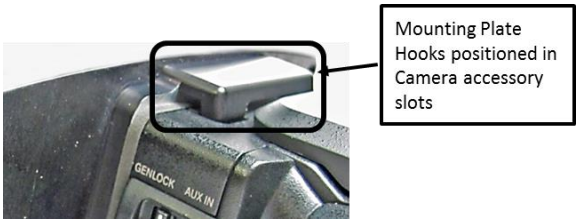

1) Position the Mounting Plate so that the two Mounting Plate hooks sit in the Camera accessory mounting slots
2) Line up the Mounting plate with the screw holes in the Camera (the same ones used by the Battery Mount)
3) Make sure that the connectors and wires feed through the (B) Connector wire cut out and are not pinched between the Camera and the Mounting Plate

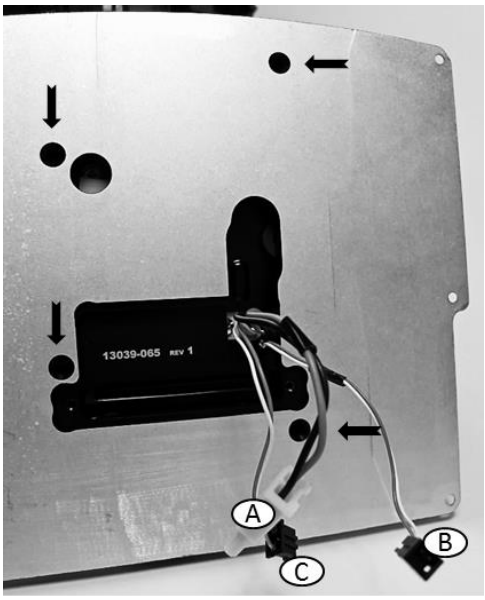

1) When the Plate is seated properly secure it to the Camera using the provided 4 Chrome plated flat head screws
2) Before tightening down the Plate confirm that the wires move freely in the Connector wire cutout

Installation of the Connector Adaptor Plate And Connection Of Required Cables

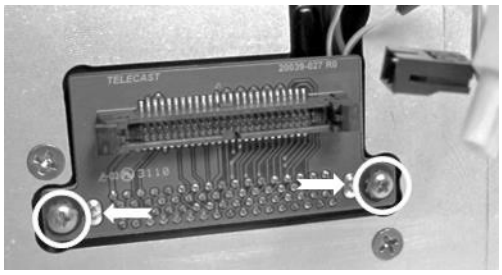

1) Position the Connector Adaptor Plate into the cutout as shown
2) Carefully push the Adaptor Plate onto the existing 68 pin connector in the Camera
3) Secure the Adaptor plate to the Camera using the two provided lock washer screws – Do not over tighten these screws so as to prevent damage to the Adaptor plate

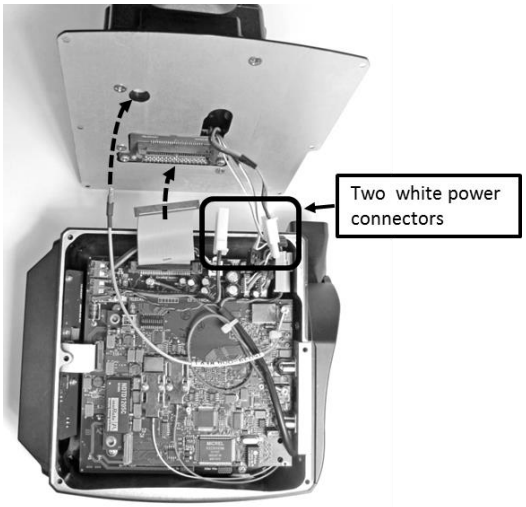

1) Position the Camera Unit in front of the Camera and Mounting Plate as shown
2) Position the various connectors so that they do not interfere with each other
    a. White Power Connectors
    b. 68 Pin Ribbon Cable
    c. HD/SDI Video Cable
3) Position the two unused black voltage and battery data connectors so that they are out of the way

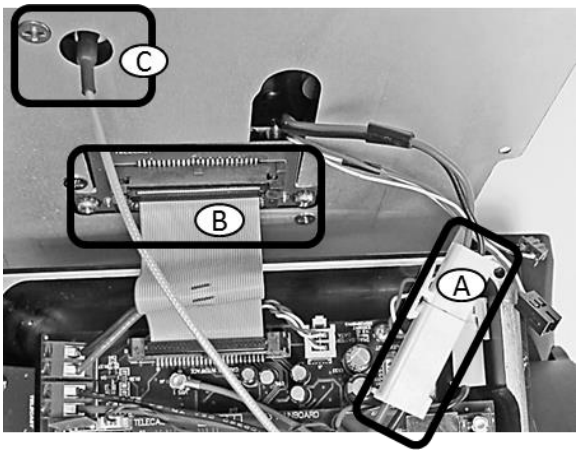

1) Connect the two white Power Connectors (A)
2) Carefully seat the 68 pin ribbon cable on to the Camera Adaptor Plate (B)– line up the connector key and open the locking levers on either side of the Camera Adaptor
3) Only slight pressure is needed to firmly connect the ribbon cable if the key is properly aligned – once seated the locking levers will snap closed and secure the connector
4) Connect the HD/SDI Cable (C) to the Camera video connector through the Video Connector cut out

Mounting Of the Camera Unit On To the Mounting Plate

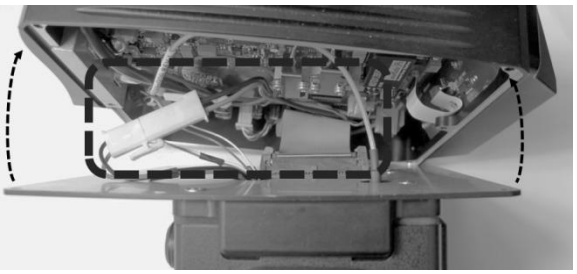

1) Carefully position the various wires within the Camera Unit so that they "float" between the Mounting Plate and the Camera Unit – make sure that they will not be pinched when the Camera Unit is attached to the Plate
2) Locate the Camera Unit so that the Camera Mounting Plate is seated within the interior of the Camera Unit – you may want to insure that the Camera is stable and stationary during this process

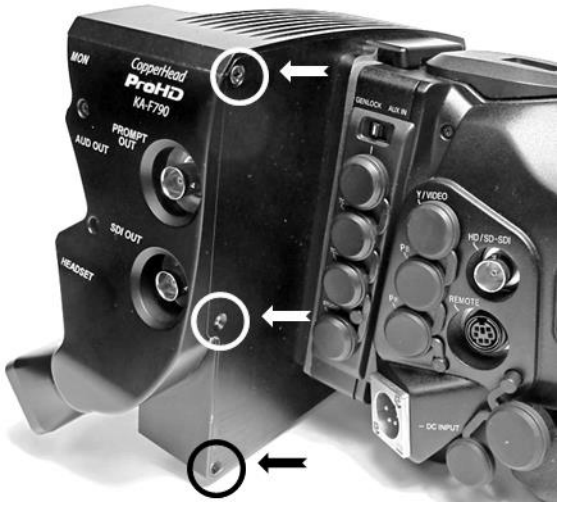

1) When the Camera Unit is securely positioned on the Mounting Plate and all wires are securely contained within the Camera Unit secure the Camera Unit using the six provided black flat head screws
2) Install all six screws loosely before tightening them down

Operational Test of the Installed System

When the Camera Unit has been successfully installed perform an Operational Test of the system to insure that all connections were made properly. Follow the setup and operating procedures described in Chapters 5 & 6 of this user guide.

3.2. Mounting Power Wafer Unit to the Copperhead KA-F790 Camera Unit

This example illustrates the use of a camera with an Anton-Bauer battery mount system. This case illustrates a configuration where the camera is powered through the Power Wafer option. The Power Wafer is powered through a Hybrid fiber cable which is powered from the Copperhead FS-790 Base Station or MPS External Power Supply.

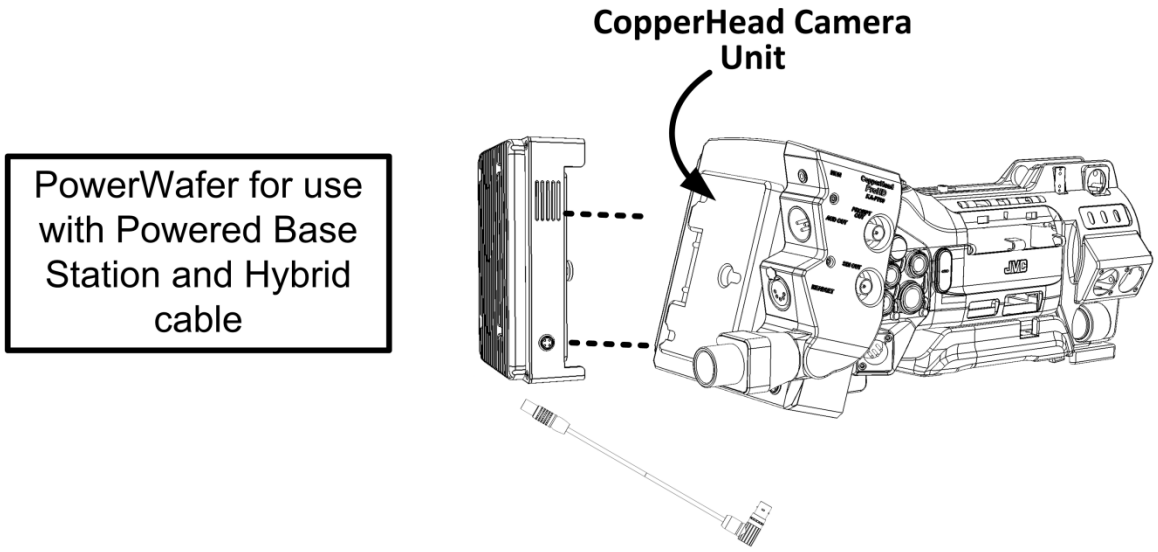

Figure 9 - Mounting the Power Wafer Unit to the Copperhead FS-790 Camera Unit

The Power Wafer is attached to the Copperhead FS-790 Camera Unit in place of the battery. It is attached in the same manner as the camera battery.

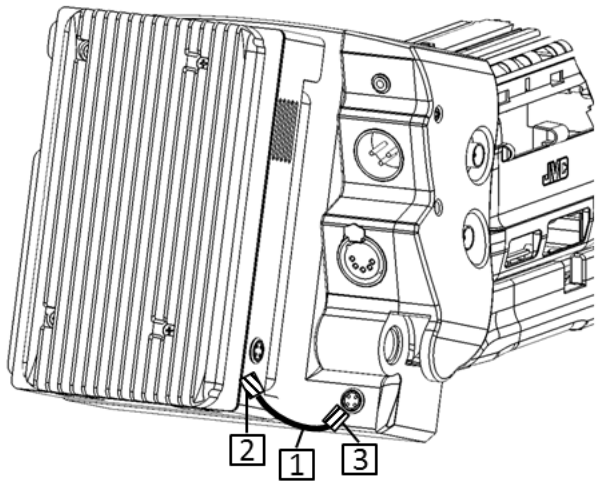

Figure 10 - Connecting the Power Wafer

When the Power Wafer is securely mounted to the Copperhead FS-790 Camera Unit connect the supplied Power Wafer connector cable (1) between the Power Wafer (2) and the Power Wafer connector on the Camera Unit (3)

The Power Wafer to Camera Unit cable is supplied with the Copperhead Power Wafer Unit. For configuration please see Chapter 5.

3.3. Relocation of the Copperhead RM-790 Base Station fiber connector

The Copperhead RM-790 Base Station may be configured with the fiber connector mounted either on the back or the front of the Base Station. You may order your Base Station in either configuration and it is possible to relocate the Fiber Connector from one position to the other in the field.

Figure 11 - Copperhead RM-790 Base Station with Rear Mounted Fiber Connector

Figure 12 - Copperhead RM-790 Base Station with Front Mounted Fiber Connector

The Fiber Connector relocation process can be accomplished by a qualified Grass Valley Fiber technician in about 15 minutes or less. You should give yourself an hour with the expectation that it will take less time.

For a complete illustrated step-by-step procedure please go to http://www.grassvalley.com/support or contact Grass Valley support directly.

Page Intentionally Left Blank

Chapter 4. Copperhead FS-790 Transceiver System Detailed Description

This chapter describes in detail each element on the Camera Unit and Base Station of the Copperhead FS-790 Transceiver System. Physical configuration of the system and system connections and practical operation are covered in following chapters. For an overall view of component location please see the Copperhead FS-790 Transceiver System overall diagrams in Appendix 4.

4.1. Copperhead KA-F790 Camera Unit

Copperhead KA-F790 Camera Unit Connector Area

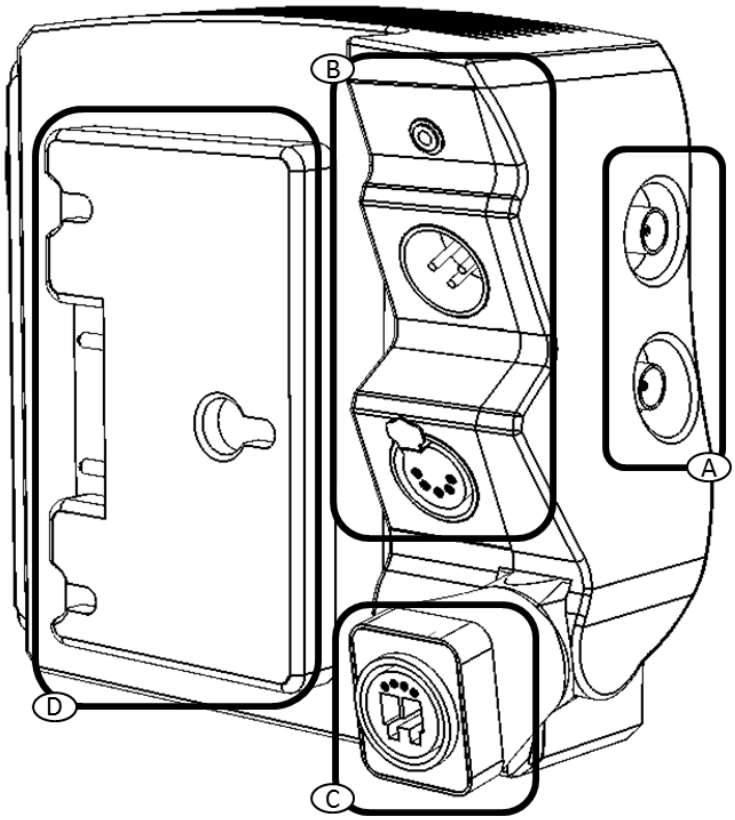

The connector area of the Camera Unit has 4 areas of interest:

A) Video Connector Panel
See Page 30
B) Audio/Intercom Connector Panel
See Page 30
C) Fiber Connector & Power Wafer Connector
See Page 31
D) Battery Mount
See Page 32

Figure 13 - Copperhead FS-790 Camera Unit Back Side

Copperhead KA-F790 Camera Unit Connector Area –Connectors

For additional information about the signals carried on these connectors please see Page 4.

Area A – Video Connector Panel

Throughout this document component Key Numbers are coordinated with the overall system diagrams found at the end of this User Guide in Appendix 4.

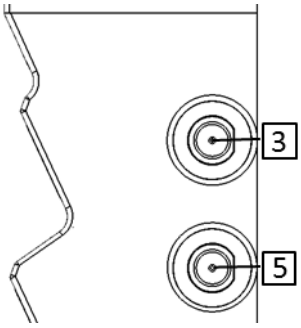

3) Prompter Out (from Base Station)

5) SD-HD/SDI Digital Video Output (from Base Station)

Area B - Audio/Intercom Connector Panel

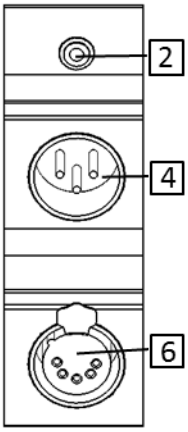

2) Monitor Headset Connector
   Typically return intercom audio from the Base Station

4) Audio Output (from Base Station)
   Typically return audio from the Base Station

6) Intercom Headset Connector
   Two way intercom signals

Area C - Fiber Connector & Power Wafer Connector

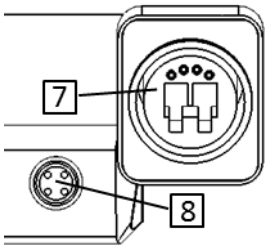

7) Fiber Cable Camera Connector

8) Power Wafer Connector

The Copperhead KA-F790 Camera Unit is shipped with one of the two Fiber Connectors shown below.

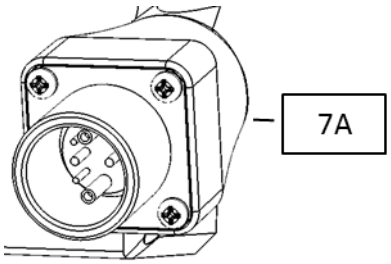

15 A) SMPTE 304M (powered)

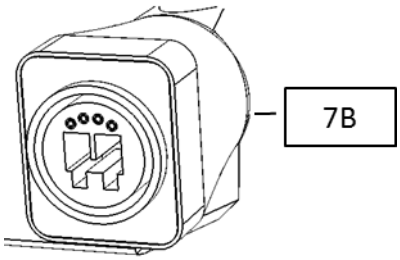

15 B) OpticalCON (powered or unpowered)

Area D – Battery Mount

The Copperhead KA-F790 Camera Unit is fitted for one of two of Battery to camera mount types: the Anton Bauer mount or the V-mount. The battery mount shipped with the camera is reused as the battery mount installed on the Camera Unit.

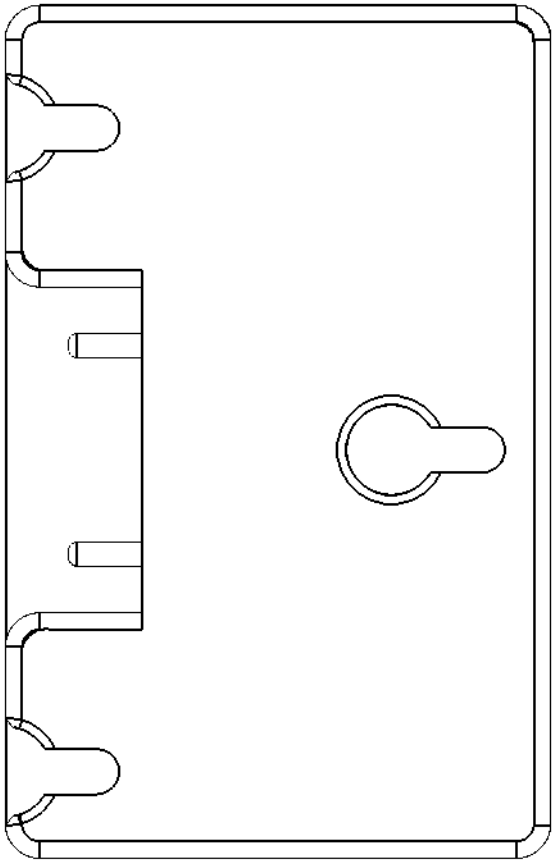

Anton-Bauer Type Battery Mount

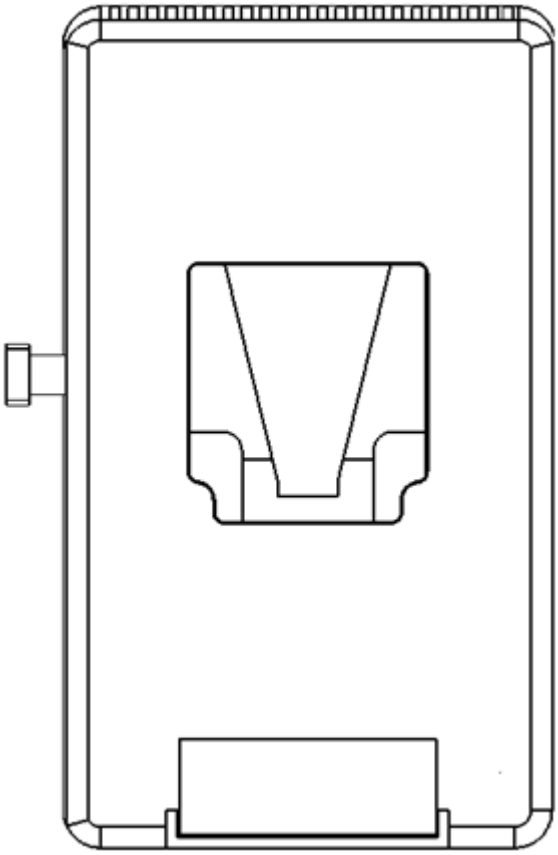

V-type Battery Mount

Copperhead KA-F790 Camera Unit Indicator and Control Panel

The Copperhead KA-F790 Camera Unit Indicator Panel has a series of LED displays that monitor the various signal paths between the Camera Unit and the Base Station.

For signals that remain constant, such as time code and video, the LED remains on as steady green. For signals that fluctuate such as audio, the LED will reflect the varying signal activity...

If the LED is off, either the signal has been lost or it is not in use.

Please see the Overview Diagram in Appendix 4

IN

The LED indicators on the left side of the panel indicate signal paths from the Camera Unit to the Base Station.

OUT

Right side LEDs indicate signal paths from the Base Station to the Camera Unit.

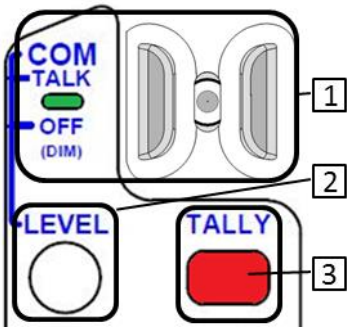

1) **Intercom Control Group**

   Intercom Talk active indicator controlled by switch

   Please see Section 6.4 for information on use of the Intercom Control Group

2) **Intercom Headset Level Control**

3) **Tally Indicator Light**

   Indicates the status of the GPI/Tally 1 signal

   Off when the signal is not present

   Bright Red when the signal is present

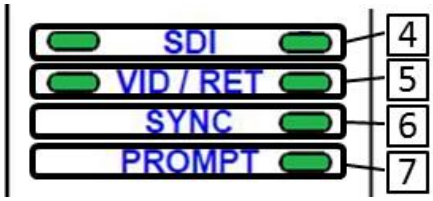

4) **SDI Digital Video Signal**

   Monitors camera SDI Video to Base Station and SDI return video to the Camera Unit

5) **Video/Return – Analog Video Signals**

   Monitors Camera Monitor video from the Camera Unit to the Base Station and Return Video to the Base Station from the Camera Unit

6) **Sync**

   Monitors Genlock (one way from Base Station to Camera)

7) **Prompt**

   Monitors a Prompter Feed (one way from Base Station to Camera

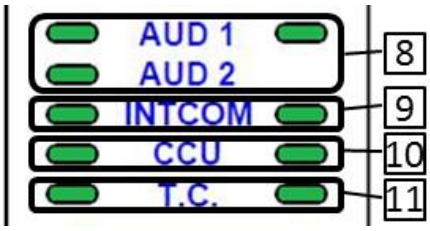

8) AUD 1 & AUD 2 (Program Audio Channels 1-2)

Monitors program audio from Camera Unit to Base Station and return audio from Base Station to Camera Unit

9) INTCOM

Monitors Intercom activity from Camera Unit to Base Station and return audio from Base Station to Camera Unit

10) CCU

Monitors camera control unit data in both directions

11) T.C.

Monitors time code from Camera Unit to Base Station and time code from Base Station to Camera Unit

Area D - Optical Link Signal Strength Indicator & Power Switch

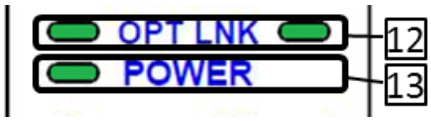

12) Optical Link Indicator

Indicates the status of the optical connection from base to camera and camera to base

Green when both the Base Station and Camera Unit have optical power within normal range.

Red when either the Base Station or Camera Unit optical power is not within normal range.

13) Power Indicator LED

Green indicates power is applied to the Camera Unit. When the camera is powered on so is the KA-FP790 Camera Unit.

Blinking Green indicates a Camera Unit error. Refer to DIAG display mode for details – Page 64

4.2. Copperhead FS-790 Base Station

The Copperhead FS-790 Base Station is available with a number of options. The unit is ordered with a specified Power Module, Audio/Intercom Module and Fiber Connector. For an overall view of component location please see the overall diagrams in Appendix 4.

Copperhead FS-790 Base Station Front Panel

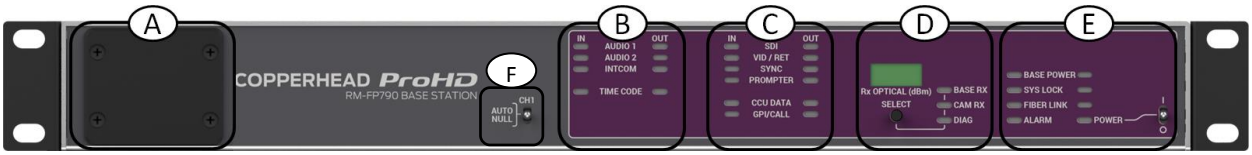

Figure 14 - Copperhead FS-790 Base Station Front Panel

A) Optical Connector
   See this Page (Front mounted Optional)
B) Audio Indicators
   See Page 36
C) Video/Data Indicators
   See Page 36
D) Signal Strength Indicators/Setup
   See Page 37
E) Status/Power Indicators
   See Page 37
F) AUTO NULL
   See Page 39

Copperhead RM-790 Base Station Front Panel – Identifying Controls & Connectors

Area A – Front Panel Optical Connector (Optional)

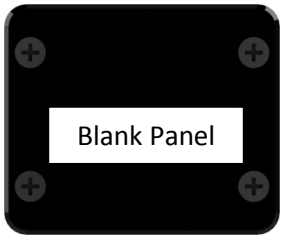

Area A of the Copperhead RM-790 Base Station provides for the optional mounting of the Fiber Optical Connector on the front of the Base Station instead of the rear of the Base Station.

For information on how to convert the Base Station from Rear to Front Fiber Connector see Page 27.

Two types of Fiber Connectors are available for use with the Copperhead RM-790 Base Station. One of these Fiber Connectors is pre-configured at the time of delivery.

OpticalCON **SMPTE 304M**

Figure 15 - Fiber Connector Types

Area B – Audio Indicators

LED Indicators to the left side of the label indicate signal paths from the Camera Unit to the Base Station and right side LEDs indicate signal paths from the Base Station to the Camera Unit.

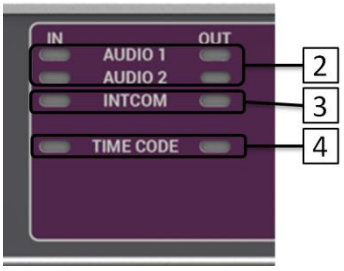

2) Audio Channels 1-2
Monitors Program audio from Camera Unit to Base Station and one channel of return audio from Base Station to Camera Unit

3) Intercom
Monitors Intercom audio from Camera Unit to Base Station and from Base Station to Camera Unit

4) Time Code Signal
Monitors the time code signal generated by the Camera coming to the Base Station and the Base or House timecode from the Base Station to the Camera Unit

Area C – Video/Data Indicators

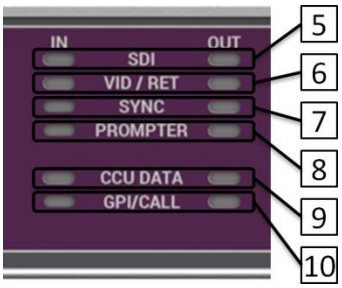

5) SDI Digital Video Signal
Monitors camera SDI video to Base Station and SDI return video to the Camera Unit

6) Vid/Ret
Monitors Camera analog video from the Camera Unit to the Base Station and Return analog video to the Camera Unit from the Base Station

7) Sync
Monitors Genlock signal (one way from Base Station to Camera)

8) Prompter
Monitors Prompter Feed (one way from Base Station to Camera)

9) CCU Data
Indicates that two-way communication exists between the Camera Remote Panel and the Camera

10) GPI/Tally Indicators 1-2
Monitors GPI/Tally Signal 1 to Base Station and Camera and GPI/Tally Signals 1&2 to Camera Unit from Base Station

Area D – Signal Strength Indicators/Setup

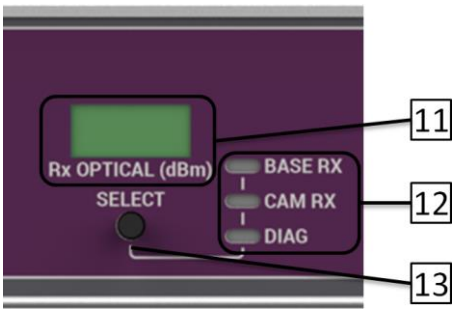

11) Signal Strength Readout in dBm
This display changes between display modes when selected

12) Readout Function Indicator
BASE RX – Optical Link signal strength received at Base Station from Camera Unit
CAM RX – Optical Link signal strength received at Camera from Base Station
DIAG – Digital display is in Diagnostic mode

13) Select Button
Chooses between three modes of operation

For details on how the setup/Diagnostic functions operate please see Page 64.

Area E – Status/Power Indicators

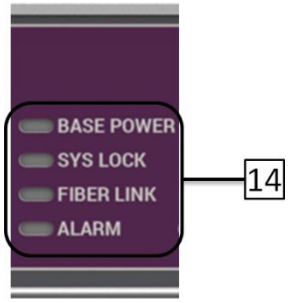

Note: Hybrid Power Indicators are present only on a powered base station unit

14) Status Indicators
BASE POWER - indicates the status of all power levels in the Base Station
Green when all power levels are normal.
Red when any power level is not normal.

SYSTEM LOCK - indicates that the Base Station is communicating with the Camera Unit.
Green when communicating with Camera Unit
Red when it is not communicating with the Camera Unit

FIBER LINK - indicates the optical power status of the Base Station and camera
Green when both the Base Station and camera optical power are within a normal range.
Red when both the Base Station and camera optical power are not within a normal range
Orange when either the Base Station or camera optical power are not within a normal range

ALARM - indicates that some error condition exists in either the Base Station or the camera.
Red if there is a Base Station error. Refer to the Base Station DIAG for details on the error.
Orange if there is a camera error. Refer to CAM DIAG for details for the error.

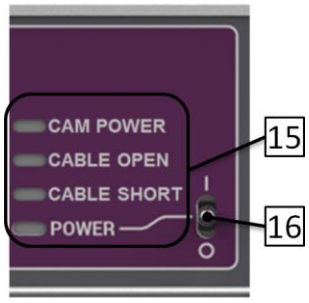

Note: Hybrid Power Indicators are present only on a hybrid power unit

15) Hybrid Power Indicators

The Hybrid Power indicators are only applicable to units with the internal power supply (for configurations using the optional MPS power supply – see Pages 47 & 49).

CAMERA POWER - indicates that high voltage is applied to power the camera.

Green when high voltage is being supplied to the camera.

Off when there is no high voltage applied to the camera

CABLE OPEN - indicates that the high voltage cable is open or there is no high voltage cable connected.

Green when the cable is properly connected from the Base Station to the camera.

Red when there no cable connected to the camera or the cable is connected but open.

High voltage will not be applied to the camera until the open condition is corrected.

CABLE SHORT - indicates that the high voltage cable connected is shorted.

16) Power Switch & Power Indicator

Toggle switch to enable or disable Base Station power.

LED turns **Green** when on/off switch is changed to the **ON** position. With a hybrid power system (power supplied by the Base Station) this switch will control power to the Camera and the Camera Unit

For the hybrid system to be properly powered, the AC Mains switch on the rear of Base Station must be in the on position.

See next page for details.

AUTO NULL – Once **all** Belt Pak and Headsets are plugged into the system, on both ends:

1. Make sure no users are wearing the headset!
2. Turn ALL volume knobs fully off.
3. Disable "TALK"
4. Press the Auto Null Switch UP momentarily.
5. The Status Display will indicate when auto null is completed after approximately 15 seconds.

Copperhead RM-790 Base Station Back Panel

Figure 16 - Copperhead RM-790 Base Station Back Panel (Powered Version)

A) Power & Fiber Connectors
See this Page & Page 40

B) Video/Sync/Data/Control Connectors
See Page 40

C) Video Connectors
See Page 40

D) Audio/Intercom Connectors
See Page 41

Copperhead RM-790 Base Station Front Panel – Identifying Controls & Connectors

Area A – Power & Fiber Connectors (Power Module)

The Copperhead RM-790 Base Station can be configured with one of three different Power Module Options. The connection and practical use of each of these options is covered in Chapter 5. Multi-pin connector wiring suggestions are covered in Appendix 1.1.

External Power Options

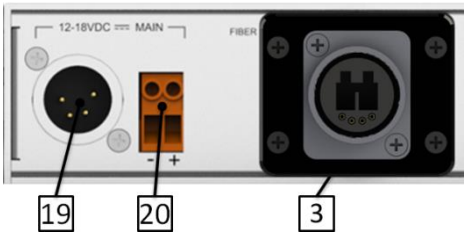

<u>Internal Power with OpticalCON Connector</u>

19) 12V DC External Power Supply input connector (XLR 4 Pin — Pin 1: Ground (-); Pin 4: Positive (+))

20) 12V DC Input – terminal block
See Appendix 1 – Page 73 for connection details

3) OpticalCON Connector

Internal Power Options

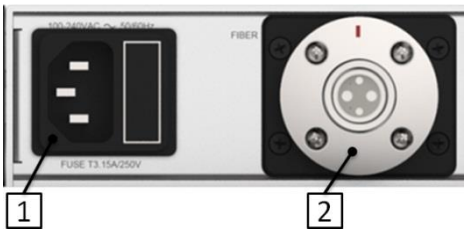

Internal Power with SMPTE 304MConnector

1) **AC Power Receptacle and 4AMP Dual Fuse Assembly**
   100-240V 50/60 Hz See Page 72 for the Fuse Specification

2) **SMPTE 304M Connector**

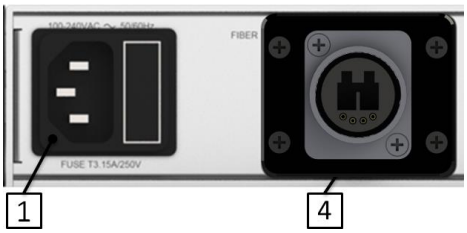

Internal Power with OpticalCON Connector

4) **OpticalCON Connector**

Area B – Sync/Data/Control Connectors

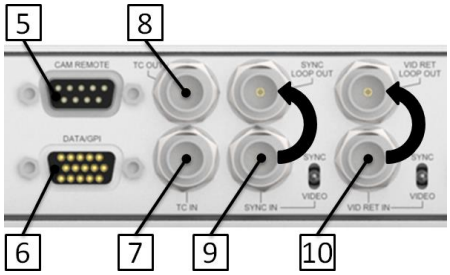

5) **Camera Remote Control Panel Connector**
6) **Data/GPI Multi-Pin Connector**
7) **Time Code In to Camera**
8) **Time Code Out from Camera**
9) **Sync/Genlock input connector & Loop through**
10) **Analog Video Return to camera & Loop through**

Area C – Video Connectors

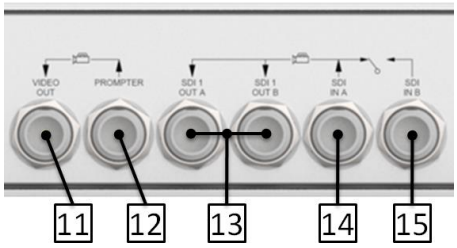

11) **Video Output (Analog) from Camera**
12) **Video Prompter input to Camera**
13) **HD/SDI Program from Camera Unit outputs A & B**
14) **SDI Return Video source Input to Camera**
15) **Alternate, selectable SDI input. This second connector affords users the ability to select one of two separate SDI sources for return to the Copperhead Camera unit. A typical use for this feature would be to loop the "SDI OUT B" output – typically the program SDI source from the Camera unit – back to the camera providing a purely digital "Return Video" path, as well as providing a feedback mechanism for the camera operator indicating that the fiber optic system is fully functional. Optionally, this second input can be used for any alternate SD/HD SDI source the user may prefer to send back to the Copperhead Camera Unit. An additional input, placed on pin 3, has been added to the "DATA/GPI" DB-15HD connector to support the**

added feature and operates as follows: Unconnected/"logic high" (TTL or CMOS logic levels) enables the "SDI IN A" input; Shorted to pin5 or pin7 (circuit ground)/"logic low" (TTL or CMOS logic levels) enables the "SDI IN B" input. Functionally similar to the GPI inputs, actuation of this input switch can be accomplished by either a logic input or by a remote relay or switch contact closure.

Area D – Audio/Intercom Connectors

The Copperhead RM-790 Base Station can be configured with one of two different Intercom Options. A third option utilizing a Four-Wire intercom system can be deployed using the 25 pin connectors. Multi-pin connector wiring is covered in Appendix 2

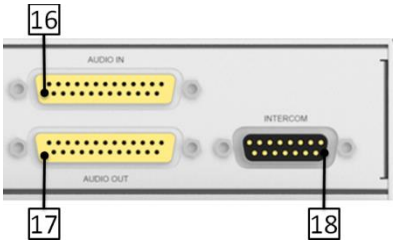

Audio & Intercom

16) Audio In and Four-Wire Intercom In
17) Audio Out and Four-Wire Intercom Out
18) RTS and CC Intercom Input/Select

4.3. Additional Copperhead FS-790 Transceiver System Items

Your Copperhead FS-790 Transceiver System may consist of one or more of the following items.

1. Portable fiber reel with fiber per your purchase order
2. JVC Supplied Camera Control Unit (please refer to the User's guide supplied with this product)
3. Optional "Power Wafer" Camera Adaptor
4. Optional MPS External Power Wafer Power Supply
5. Optional "PowerPlus" Camera Adaptor and Power Adaptor (please refer to the User's guide supplied with this product)
6. Optional HDX Power Unit (please refer to the User's guide supplied with this product)

“Power Wafer” Camera Adaptor

The Copperhead KA-FP790 Camera Unit can be powered by the optional “Power Wafer” Camera Adaptor. The Power Wafer replaces the local camera battery and any local AC power supply adaptor. The Power Wafer gets its power from the Hybrid fiber cable and the Copperhead FS-790 Base Station equipped with the internal power supply or from the optional MPS external supply.

Up to 95 watts of power can be delivered to the camera, Camera Unit and camera accessories. Up to 780 feet (240 meters) of cable can be used when the Camera Unit is powered directly from the Base Station.

The use of an optional external power supply can extend Base Station to Camera range and increase camera power flexibility. The MPS “Throw Down” Power Adaptor provides this functionality. This unit is described on Page 44.

The Power Wafer replaces the battery or local battery mount AC adaptor. Shown with the Anton/Bauer Battery Mount option.

A short jumper cable carries power from the Camera Unit to the Power Wafer. The power comes to the camera on the power section of the Hybrid Fiber Cable.

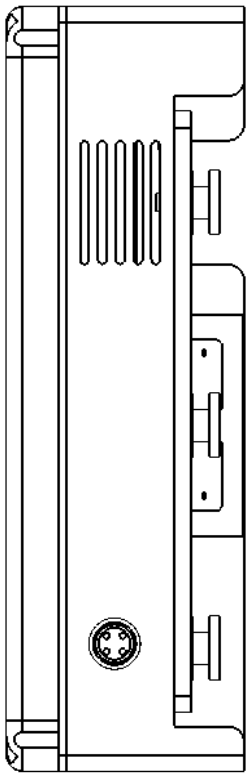

MPS External Power Wafer Power Supply

The Copperhead MPS external power supply provides 95 watts of 12VDC power and fiber cable signal connectivity from the Base Station to the Camera. From the MPS unit to the camera can be configured using either a Hybrid OpticalCON connector or a SMPTE 304M connector. The length available is up to 780 feet or 240 meters.

From the MPS unit to the Base Station can be configured using a non-hybrid OpticalCON connector or two ST connectors. The length available is up to 5 kilometers (3 miles).

The MPS is powered locally with standard AC power. The unit is free standing.

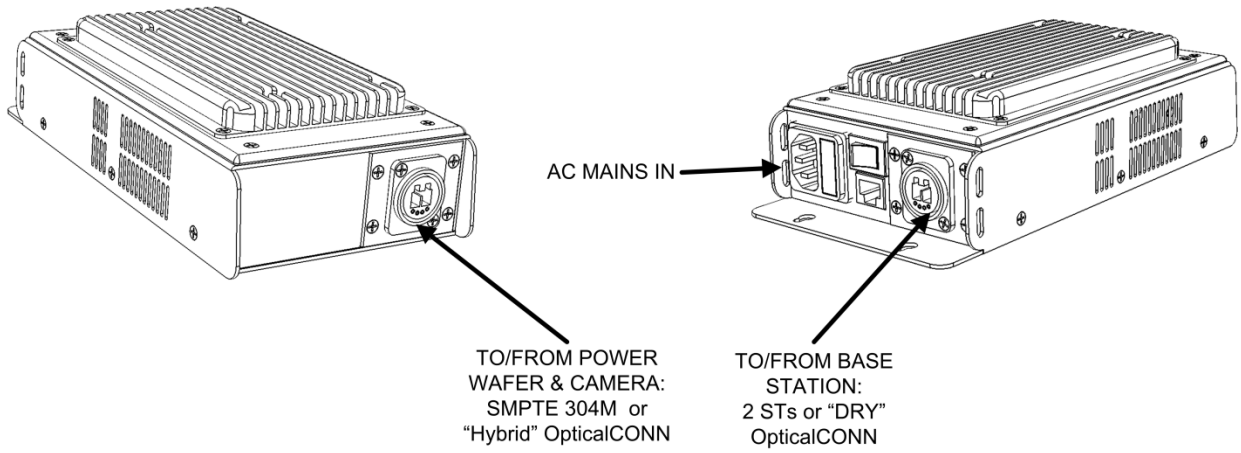

Figure 17 - MPS External Power Wafer Power Supply

All MPS Units require the Power Wafer to provide power to the Camera Unit. Four variations are available with a different set of fiber cable connectors. All MPS units provide 95 watts of 12VDC power.

Part Number	Fiber Connection to Camera	Fiber Connection to Base Station
CH2-MPS-95VD-2ST-NEU	OpticalCON	2 STs
CH2-MPS-95VD-2ST-304	SMPTE 304M	2 STs
CH2-MPS-95VD-NEU-NEU	OpticalCON (with power)	OpticalCON (no power)
CH2-MPS-95VD-NEU-304	SMPTE 304 (with power)	OpticalCON (no power)

Table 3 - MPS Power Supply Adaptor Options

Page Intentionally Left Blank

Chapter 5. Connection of the Copperhead FS-790 Transceiver System

Prior to connecting your Copperhead FS-790 Transceiver System please insure that each of the required cables is available for use. This includes standard video, audio and multi-pin cable sets required for your particular installation. Please see the Appendix for information regarding cables, signals and custom multi-pin cable fabrication. Covered in this chapter are:

1) Connections between the Copperhead FS-790 Base Station and the Camera Unit (Fiber Cable)

2) Connections between the Copperhead FS-790 Base Station and the base video infrastructure & power components

3) Connections between the Copperhead FS-790 Camera Unit and external equipment

5.1. Connections between the Copperhead RM-790 Base Station and the KA-F790 Camera Unit

The following table summarizes the various Fiber Cable connection options between the Copperhead FS-790 Base Station and the Camera Unit.

Cable Type	Base Station Power	Camera Unit Power	Distance Range Between Camera and Base
Tactical Fiber	Internal	Local Battery or AC Power	Up to 10 KM (This range can be extended to greater than 20 KM through use of the optional High Power Laser - must be ordered at time of purchase)
SMPTE Hybrid Fiber	Internal	Power Wafer Camera Adaptor	240 meters
SMPTE Hybrid Fiber	External – MPS Power Wafer Power Supply 95 Watts[1]	Power Wafer Camera Adaptor	5 KM between base and MPS power supply 240 meters between power supply and camera
SMPTE Hybrid Fiber	External – HDX Power Supply – 150 Watts[2]	Copperhead PowerPlus Camera Adaptor	5 KM between base and power supply 3.2 KM between power supply and camera

Table 4 - Copperhead FS-790 Power Options

1. The optional external MPS Power Supply must be equipped with the appropriate Fiber Cable connectors suitable to your system requirements. Please see Pages 43 for a description of the various options

2. The optional external HDX Power Supply provides two ST Fiber Connectors for connection between the HDX and the Base Station and a SMPTE 304M Connector for connection between the HDX and the Camera Unit. Please see the User Guide supplied with the HDX Power Supply for more information.

The following fiber connection scenarios do not take into account any customized cable and connector installations you may have at your facility. For assistance regarding more complex connection situations please contact Grass Valley or your local authorized dealer.

Tactical Fiber between the Base Station and Camera Unit

Camera Internally Powered

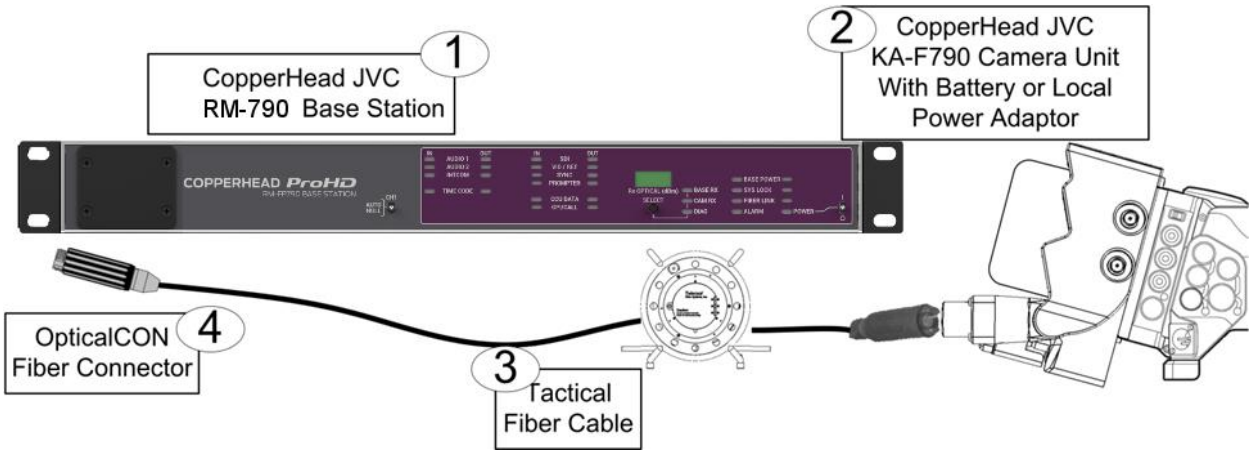

Figure 18 - Tactical Fiber between the Base Station and Camera Unit

Between the Base Station **(1)** the Camera Unit **(2)** connect a length of **Tactical** Fiber Cable **(3).**

At each end of the fiber cable will be an OpticalCON fiber connector**(4).**

The Base Station connector **(4)** may be mounted either on the front or back of the Base Station.

SMPTE Hybrid Fiber between the Base Station (powered) and Camera Unit

Camera Powered through Hybrid Cable from Base Station

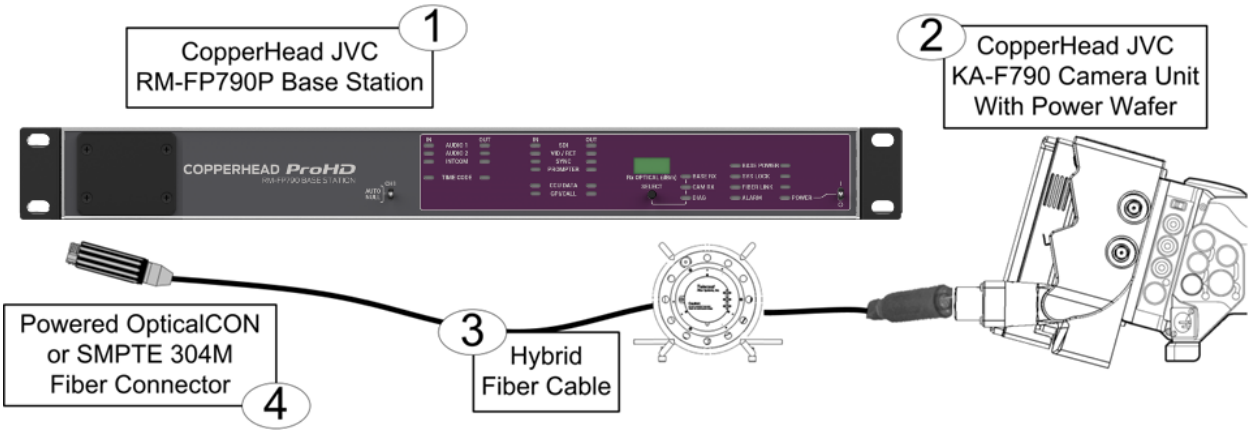

Figure 19 - SMPTE Hybrid Fiber between the Base Station (powered) and Camera Unit

Between the Base Station **(1)** and the Camera Unit **(2)** connect a length of SMPTE **Hybrid** Fiber Cable **(3).**

At each end of the fiber cable will be either an OpticalCON or SMPTE 304M Connector **(4)**.

The Base Station connector **(4)** may be mounted either on the front or back of the Base Station.

SMPTE Hybrid Fiber between Base Station and Camera Unit (Infrastructure Wiring)

Infrastructure Wiring Built-In to a Facility using OpticalCON Connectors

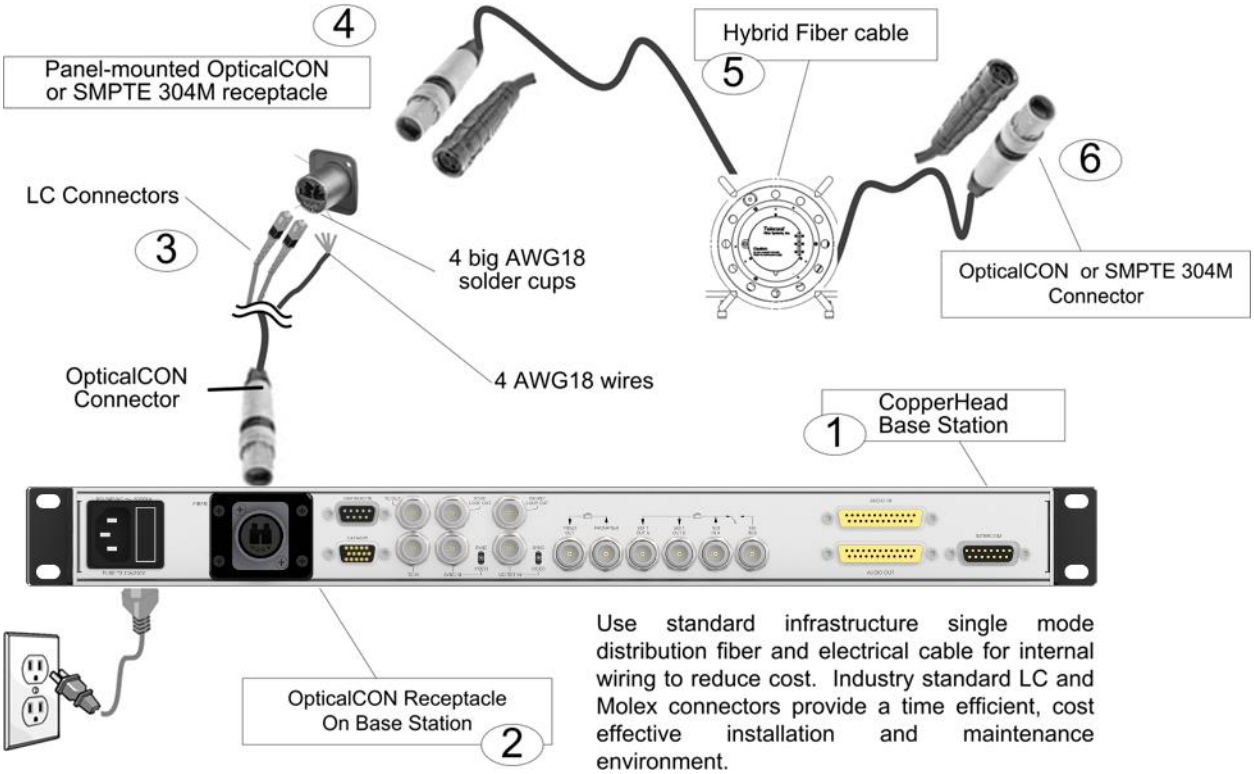

Figure 20 - SMPTE Hybrid Fiber between Base Station and Camera Unit (Infrastructure Wiring)

Panel mounted fiber connectors can be used for permanent installations such as communications closets, truck connector panels and sports facilities. A panel mounted OpticalCON or SMPTE 304M receptacle **(4)** is connected to the Base Station **(1)** through infrastructure grade wiring. Two LC Fiber Optic connectors and four soldered AWG18 copper power wires **(3)** connect to the Base Station through an OpticalCON connector**(2).**

Between the panel mounted receptacle and the Camera Unit is standard Hybrid Fiber Optic cable **(5).** This cable is matched to the panel mounted receptacle with either an OpticalCON or SMPTE 304M connector **(4)** to **(6).**

SMPTE Hybrid Fiber between the MPS Power Unit and Camera Unit

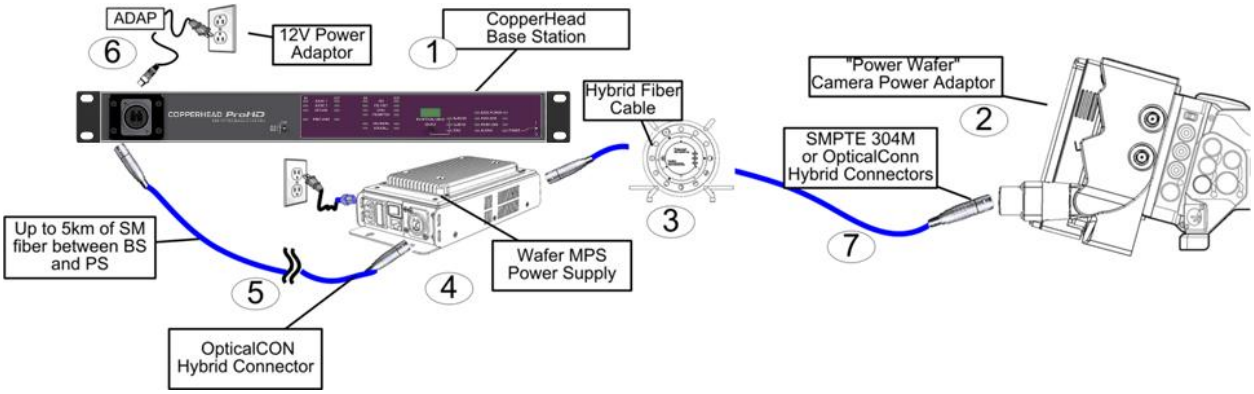

Figure 21 - SMPTE Hybrid Fiber between the MPS Power Unit and Camera Unit

Between the Base Station **(1)** and the External Wafer Power Supply **(4)** connect an OpticalCON Tactical Fiber Cable **(5)** (optionally the MPS Power Supply can be equipped with LC connectors)**.**

Power the External Wafer Power Supply locally by connecting to AC Power. Between the External Wafer Power Supply **(4)** and the Camera Unit connect a length of SMPTE Hybrid Fiber Cable **(3).** At each end of the fiber cable will be either an OpticalCON or SMPTE 304M Connector (**7).** The camera will be powered by the Power Wafer **(2).**

The Base Station connector **(1)** may be mounted either on the front or back of the Base Station. The Base Station will be powered by connection to local AC power **(6).**

5.2. Connections to the Copperhead RM-790 Base Station

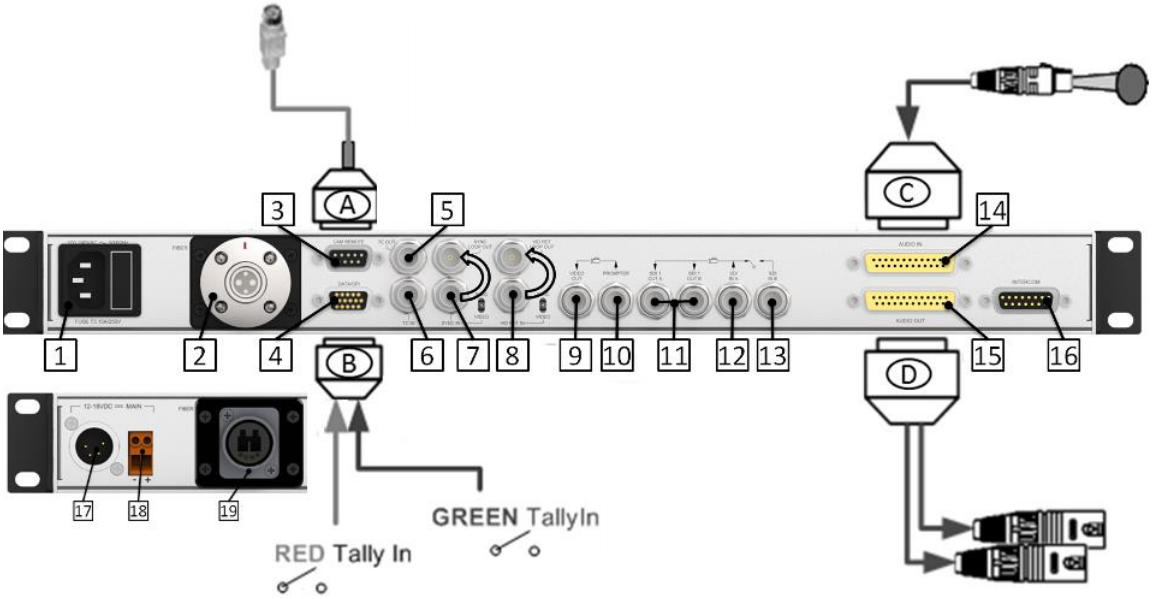

Figure 22 - Copperhead FS-790 Base Unit Connections

Multi-Pin Cable Assemblies Used with the Copperhead FS-790 Base Station

A) Camera Remote Control (Remote) Connector–

Connect your JVC Camera Remote Control Panel (such as RM-LP25, RM-LP55, or RM-LP57).

B) GPI Connector

Connect two GPI/Tally Inputs, typically from your Production Switcher

See Page 71 for connector wiring details

C) Audio In Connector

Connect Return Audio (line level)

See Page 75 for wiring details

D) Audio Out Connector

Carries audio back from the camera location – connect to an audio processing chain or monitors. See Page 76 for wiring details

Connectors into and out of the Copperhead FS-790 Base Station

This information duplicates some of that from above sections. It is presented here to provide a single list of all Base Station connections. Key numbers refer to the diagram above and to the Overview Diagram found in Appendix 4.

1 & 17 **Power In**
Depending on your Base Station model, connect a standard 12V DC ADAP power source (4 Pin) or a standard 3 conductor AC Cable (IEC Plug) 100-240V 50/60 Hz

2 & 19 **Fiber Connector** (this connector can be mounted on the Base Station Front Panel – See Page 28)
Connect the fiber connector from either the Fiber Cable connected directly to the camera or to the MPS or HDX external power supply if your system is so configured. The type of Fiber Connector will vary depending on your system configuration.

3 **Multi-Pin Connector A**
DB9 – 9 pin serial connector connected to an optional Camera Remote Control Panel

Power to the Base Unit must be turned off when connecting the Camera Remote Control Panel – connecting with the power on can seriously damage your equipment.

4 **Multi-Pin Connector B**
DB15 – 15 pin serial connector connected to a breakout of Tally signal connectors. Typically this connector will be connected to the Camera Tally system originating at the Production Switcher or the Tally Management system used on your production environment.

See Section 6 for an example configuration.

6 **Time Code In**
BNC Connector – Standard time code signal sent to camera – typically originating from "house" time code generator feed available to Base Station. On remote productions the primary camera may be used to originate the system time code feed (signal would return to base station via connector 8 and then be distributed to other cameras through the associated Copperhead Base Stations

5 **Time Code Out**
BNC Connector – Standard time code signal originating from the camera. This time code can be used to reference the local camera time code for proper operations and may also be used as a source for production wide time code distribution.

7 **Sync In/Loop**
BNC Connector – standard Genlock/Sync/Tri-Level sync signal. The loop through is self-terminating.

8 **Video Return (Analog) In**
BNC Connector – Typically used to send SD return video to the camera – an example is monitor out from the Production Switcher

Connectors into and out of the Copperhead FS-790 Base Station

9 **Video (Analog) Out**
BNC Connector -Typically used for SD Monitoring Video return from the Camera

10 **Prompter In**
BNC Connector – SD Video feed from external prompter system originating at Base Station location and displaying at Camera location

11 **SDI Out A & B (this carries the HD feed from the camera)**
BNC Connectors – Two identical video feeds from the camera – typically one may be used for local HD monitoring and one is fed to the Production Switcher environment.

12/13 **SDI In**
BNC Connector – Typically used to send HD return video to the camera – an example is program out from the Production Switcher

14 **Audio In- Multi-Pin Connector**
DB25 – 25 pin Connector follows the Tascam TDIF standard. The Copperhead FS-790 Transceiver System accommodates one Audio Channels Line Level. Please see Page 75 for sample wiring.

15 **Audio Out- Multi-Pin Connector**
DB25 – 25 pin Connector follows the Tascam TDIF standard. The Copperhead FS-790 Transceiver System accommodates up to two Audio Channels at Line Level. This connector handles Program audio from the Camera location. Please see Page 76 for sample wiring.

16 **Intercom Connectors #1 & #2**
XLR 3 pin Connectors (Male or Female) depending on configuration. One of two options will be installed (RTS or Clear-Com).

18 **12V Terminal Block**
Terminal Block – bare wire connector. This can be used in place of the ADAP power connection in installations that have 12V power distributed as part of their infrastructure. Do not use this at the same time as the ADAP power connection.

5.3. Connections to the Copperhead FS-790 Camera Unit

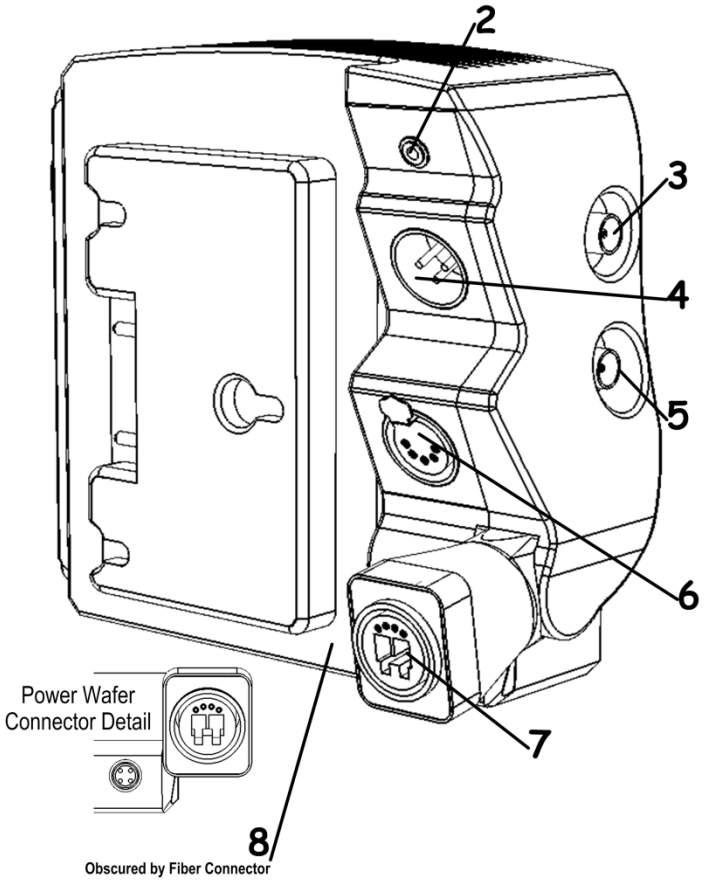

Figure 23 - Copperhead FS-790 Camera Unit Back Side Connections

Connectors into and out of the Copperhead FS-790 Camera Unit Back Side

2 **Intercom Headset Connector**
Mini-phone Jack – Provides listen only Intercom audio.

3 **Prompter Out (Analog Video)**
BNC Connector – Carries a Prompter Feed or additional Base Station return composite VBS Video from the Base Station to the Camera Unit. This requires a BNC cable between the Camera Unit and any external equipment.

4 **HD or SD/SDI Out**
BNC Connector – Carries HD or SD/SDI video from the Base Station the Camera Unit. Typically this will feed a digital monitor at the camera position (such as JVC VF-HP790 8.4" Studio Viewfinder.

5 **Audio Out**
XLR 3 Pin Male Connector – Provides Return Audio Out from Base Station. Typically connected to an IFB receiver or local audio monitor at the camera position.

6 **Intercom Headset Connector**
XLR 5 Pin Female Connector – Standard RTS-style intercom headset jack. Do not connect an Intercom Belt Pack to this connector. This connector will only function with an Intercom Headset attached.

7 **Fiber Connector**
Swivel Mounted Fiber Optic Cable receptacle – specific connector depends on your configuration.

8 **Power Wafer Connector**
Multi-Pin Connector C – Supplies power to the Camera Unit from the Power Wafer (if so configured). This cable is supplied with the Power Wafer Power Adaptor.

5.4. Camera Unit Connection Example

Please see the section above for information on these connections.

Camera Unit (Camera Facing Side) to Camera Connections

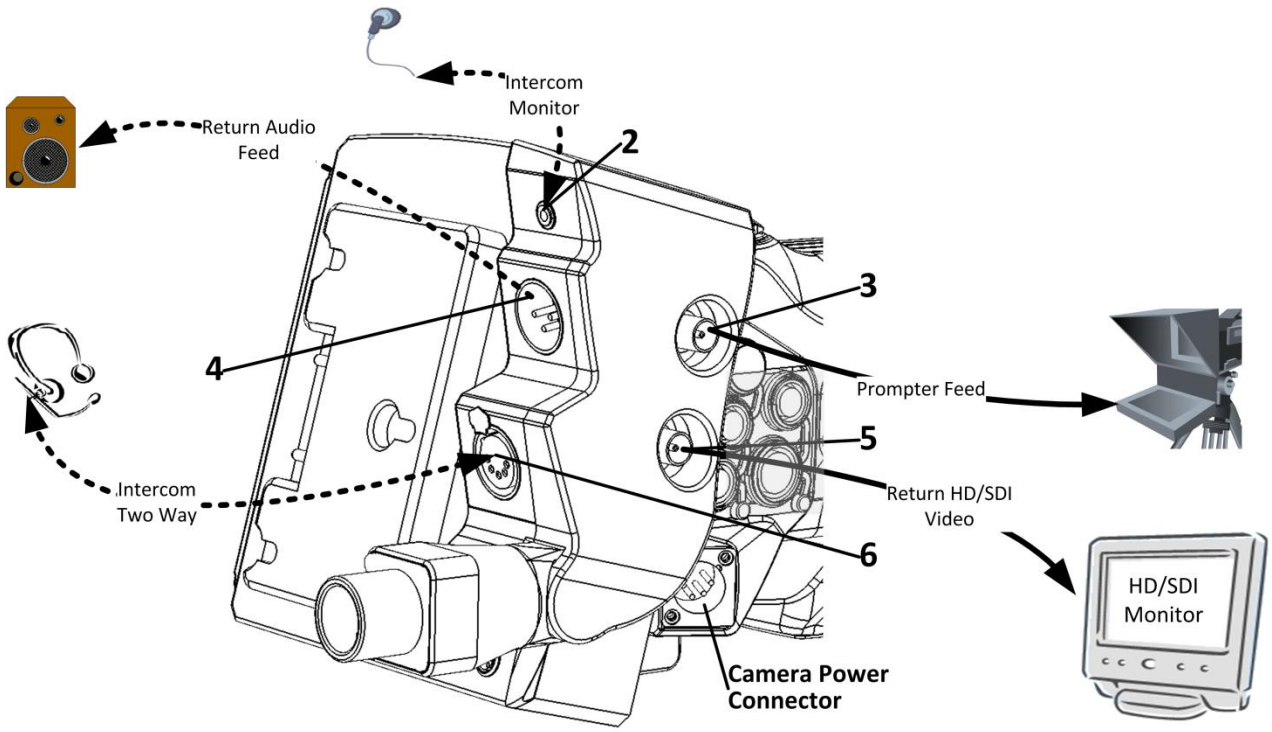

Figure 24 - Camera Unit (Camera Facing Side) to Camera Connections

Please note that a power adaptor plugged into the Camera Power Connector on the rear of the GY-HM790 Camera will only power the camera and not the KA-FP790 Camera Unit. To power both units you must supply power through one of the four methods:

1. Battery attached to Camera Unit
2. Power adaptor attached to Camera Unit
3. Power supplied through a Hybrid Fiber Cable by means of a Power Wafer adaptor
4. Power supplied through a Hybrid Fiber Cable by means of a PowerPlus adaptor

It is possible to power the camera directly through the Camera Power Connector and power the camera unit via the battery plate if the situation calls for this configuration.

Page Intentionally Left Blank

Chapter 6. Operation of the Copperhead FS-790 Transceiver System

This chapter describes in detail the operation of Copperhead FS-790 Transceiver System. Please keep in mind that a wide variety of options and variations are available, so not every possible operational environment can be described. Variations in battery and powering, fiber cable connections and intercom allow for an enormous number of slightly different operational modes.

The following topics are covered:

1) Set Up of the Copperhead FS-790 Transceiver System
2) Connecting and Managing the Fiber Cable
3) Connecting the Fiber Cable
4) Powering the System
5) Understanding Intercom usage with the Copperhead FS-790
6) Using the Digital Display
7) Using the Tally System
8) Standard Operation
9) Shutting Down the System
10) Troubleshooting

6.1. Set Up of the Copperhead FS-790 Transceiver System for operation

This section provides an overview of setup of the Copperhead FS-790 Transceiver System for operation. The following sections provide additional detail on each aspect of setup and operation.

It is important that you do an initial setup and test of your Copperhead FS-790 Transceiver System as soon as your receive in order to confirm proper operation and to provide training to you and your team prior to an actual production.

Use the following list of items as an overall checklist for setup.

1. It is highly recommended that you do not attempt to power up the system until all connections are made and in particular the Fiber Optic Cable has been connected at both ends. If you need to power up either the Copperhead FS-790 Base Station or Camera Unit make sure that the fiber connectors are securely capped. This will protect them from damage or dirt and protect you from eye damage.

2. If it is the first time setting up the Copperhead RM-790 Base Station or your setup is not permanent as it would likely be in a remote truck, stadium control room or similar, connect all required cables. The order in which you connect the cables makes no difference.

    a. Make sure to connect the Base Remote cable to the Base Station and Remote Control Panel when the Base Station power is turned off.

    b. Keep Fiber Optic cable connectors capped until actually connecting the Fiber Cable.

3. When setting up the Copperhead KA-FP790 Camera Unit and attached GY-HM790 Camera you will need to do the following:

    a. Setup the external power supply as required. Make sure all cables running between the Copperhead FS-790 Base Station and the Power Supply and local AC power cords are properly managed and secured.

    b. Connect all required cables according to Chapter 5. The order in which you connect the cables makes no difference.

    c. Set up the Intercom Talk Back switches and level controls as desired. Please see the following Section 6.4 on Page 63 for details on Intercom operation with the Copperhead KA-FP Series Camera Unit.

4. Deploy the Fiber Cable (see the next section) – you are now ready to apply power to the system.

6.2. Connecting and Managing the Fiber Cable

Connecting and managing the Fiber Cable between the Copperhead FS-790 Camera Unit and Base Station or an intermediate power supply requires you to perform four tasks:

1. Plan the route the Fiber Cable will take between the Camera Unit and the Base Station or power supply
2. Run the Fiber Cable along the planned route
3. Connect the Fiber Cable Connectors at each end
4. Power up the Camera Unit and the Base Station or power supply and check the Fiber Optic Cable Link and signal strength

Planning the Fiber Cable Route

Obviously the longer the planned cable run the more planning required. It also makes a difference whether you are running Tactical Fiber Cable or Hybrid Fiber Cable as these affect both the length and the type of exposure the cable can endure.

When planning your cable route take into the consideration the following:

1. Possible obstacles that might cause you to run short of cable – you may need to take a more indirect, but achievable route
2. Possible hazards to the cable – while tactical fiber is extremely durable it is not immune to damage. An obvious hazard is running the cable across a lawn scheduled to be cut during your live production. Make sure the empty roadway at 6AM will not be filled with heavy equipment when it comes time to retrieve your cable
3. Possible interference (physical) with the cable that might cause it to bend or kink to an extent that unacceptable signal loss occurs.
4. Safety hazards – make sure that the cable will not cause a tripping or tangling hazard with people, animals or vehicles.
5. Decide whether the Fiber Cable is to be unspooled from the Base Station location or the Camera location. Typically the reel is kept close to the base station. However if there is a chance the Camera location may need to move further away from the Base Station after initial placement it makes sense to place the reel at the camera end. Make sure there is enough free cable coming out of the stationary end of the cable reel to accommodate a well-managed connection to the camera.

Planning the cable route requires common sense and the ability to foresee the unforeseen.

Running the Fiber Cable

Do the following when running your Fiber Cable:

1. Make sure that both ends of the Fiber Cable are securely capped. In this case the concern is dirt and damage. ANY dirt in the connector can adversely affect Fiber Optical performance and potentially cause you to lose the use of your camera while the problem is diagnosed and remedied.

2. If the cable run is long or if you will lose sight of the spooling out cable reel make sure you have appropriate assistance in running out the cable. When retrieving the cable, assistance to prevent the cable end from being caught or tangled up could be critical. Don't start reeling in the cable on your own and assume the Connector end will make it back to home base safely.

3. When unspooling the cable ALWAYS make sure the stationary end (the end that goes to the Base Station or Power Supply) us securely contained within the reel. A loose Connector can bang around and be damaged and NEVER connect the stationary end of the Fiber Cable to the Base Station or Power Supply and the start unspooling the Fiber Cable. Server damage to the cable could occur due to extreme spiraling of the connected portion of the cable.

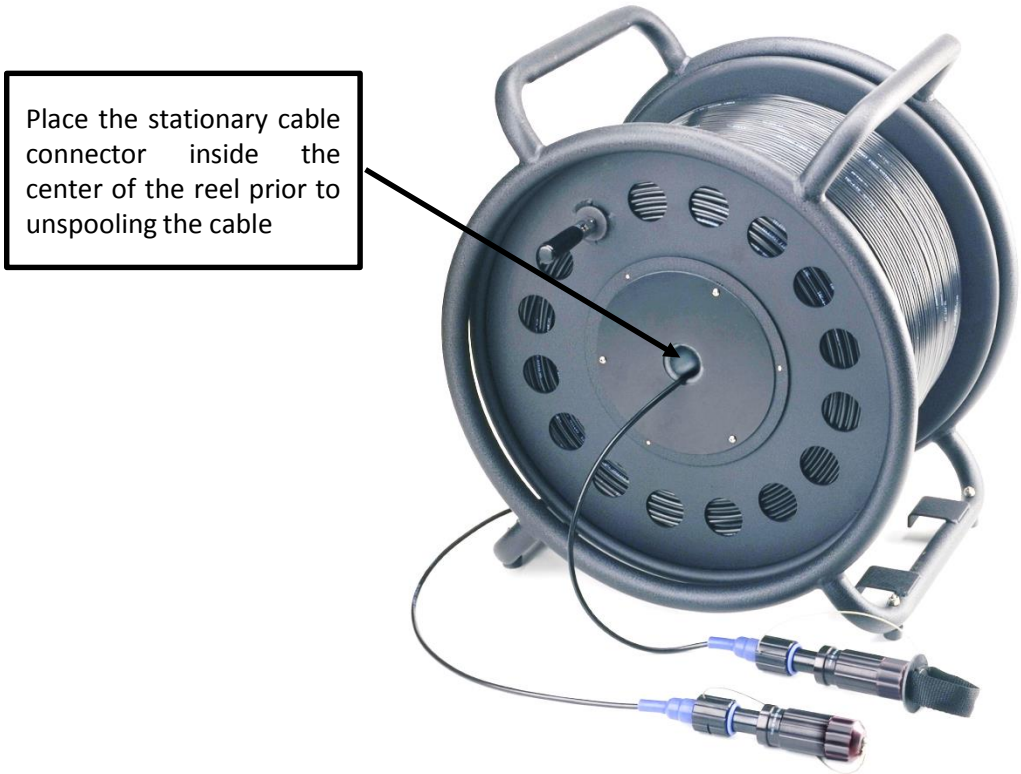

4. Prior to connecting the Fiber Connectors to the Base Station and Camera Unit inspect both Connectors. If required, clean with dry compressed air or with technical wipes that have been moistened with isopropyl alcohol. Fingerprints or other dirt on the optical connector end surfaces will reduce the optical signal level on the fiber. If the connectors have been properly capped during storage and movement you will not likely have a problem. However if a connector has been dropped or dragged through dirt or exposed to dust cleaning is recommended.

5. Once the Fiber Cable has been connected it is time to secure the Fiber Cable run. Make sure there are no cable hazards in the run. Secure the cable with Cable Guards and/or Gaffers tape to insure safety.

6. Now the system can be powered on. Plugging in Fiber Cable connectors with the power on will not damage the system but is not recommended because of the chance of possible eye damage.

7. When re-spooling the Fiber Cable on to the spool guide it across the entire width of the spool so that it winds evenly and the possibility of cinching or kinks is greatly reduced.

6.3. Powering the System

The Copperhead RM-790 Base Station and the Copperhead FS-790 Camera Unit each have a power up routine which tests the equipment and performs a system diagnostic.

Powering the Copperhead FS-790 Base Station

Powering the Copperhead FS-790 Camera Unit

Camera Power	1. Turn on the Camera Power and also any peripheral equipment connected to the camera or the Copperhead KA-FP790 Camera Unit such as monitors and microphones. Powering up the camera also powers the KA-FP790 Camera Unit.
LED Indicators On	2. On power on the Camera Unit signal and power status indicators will turn on or flicker according to their current state. Insure that all of these are in the expected state.

The Base Station has a digital display selector button which allows multiple functions for the digital display. These functions are described below on Page 65.

6.4. Intercom

The Copperhead FS-790 Transceiver System accepts both Clear-Com and RTS intercom systems on the 16 pin DB connector (item 16). In addition, the Base Station can be interfaced to a generic "Four-Wire" intercom system, using the two 25 pin audio connectors. Multi-pin connector wiring is covered in Appendix 3.

Two controls on the KA-790 Camera Unit provide the following functionality:

1. Push-to-talk (PTT) control for the intercom headset.

   This switch provides momentary/latching operation for the intercom headset microphone.

   Momentary Mode: Press and hold the "TALK" switch, then speak into the microphone. The "TALK" LED will remain lit while the "TALK" switch is held. Release the "TALK" switch when finished talking. The "TALK" LED will turn off.

   Latching Mode (for Hands-free Conversation): Press the "TALK" switch quickly; the mic will open and the green "TALK" LED will turn on and remain on. When finished talking, press the "TALK" toggle switch again to close the mic; the "TALK" LED will turn off.

   This functionality can be duplicated on the "REC" button on the camcorder's lens or the pan handle of the JVC KA-790G Studio Adaptor. To activate this function, go to the camera's menu screen and access "Camera function" → "Switch Set Items" → "LENS REC" on the menu and select either "REC" to set the REC button for traditional "Record Start/Pause" functionality. or to "Intercom" to open and close the intercom microphone. The default position is "REC" and it can be selected to "INTERCOM".

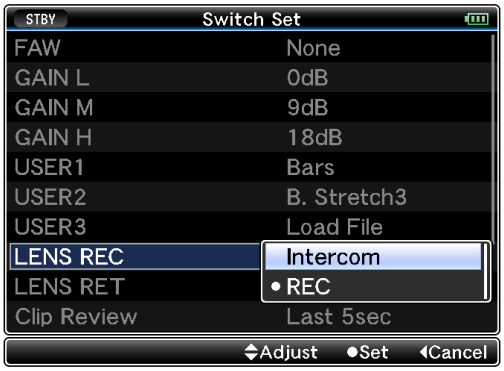

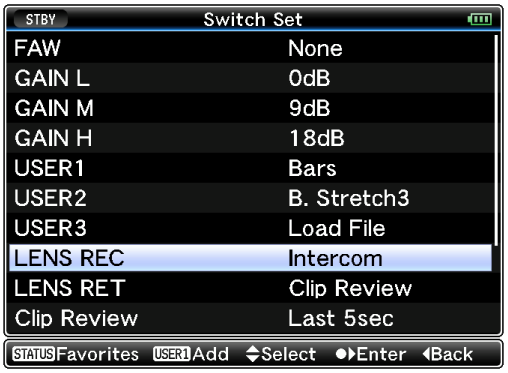

   See your Camcorder instruction manual for more details.

   - Note: This feature requires GY-HM790 camera firmware version SPL2187 V103 or higher

   The KA-790's PTT control has a secondary function that permits adjusting the brightness of the LEDs on the KA-790's control panel. To change the brightness, hold the PTT selector down ("OFF" position) for 3-5 seconds. The KA-790's LED brightness will begin to cycle, ramping down and then up and down again. Release the toggle to set the LED brightness to the desired level.

2. Volume control for the Intercom headset.

The LEDs marked INTCOM show activity on the intercom channel. They do not represent audio levels.

Note: Base Station Intercom XLRs must be terminated, or the camera headset may feedback and/or "howl." To insure proper termination, connect to a two wire system (RTS or Clear-Com compatible) with a terminated power supply. Alternately, an XLR connector with 220 Ohm resistors can be used: tie one 220 Ohm resistor between pins 1 and 2, and another 220 Ohm resistor between pins 1 and 3.

Note that the Copperhead FS-790Camera Unit acts as the last component of any Intercom Belt-Pack chain. An Intercom **Belt Pak** cannot be plugged into the Copperhead FS-790 Camera Unit. Only an Intercom **Headset** can be plugged into the Camera Unit.

6.5. Using the Digital Displays

A Brief Guide to Measurement of Fiber Optic Signal Strength

The Copperhead FS-790 Transceiver System provides direct digital readout of the Fiber Optic Link signal strength for both the Base Station to Camera Unit Fiber Link and the Camera Unit to Base Station Fiber Link. This readout is presented in units of dBm. It is useful to understand both the dB or decibel and the dBm or decibel referenced to one milliwatt.

The decibel (dB) is a logarithmic unit of measurement that expresses the magnitude of a physical quantity (usually power or intensity) relative to a specified or implied reference level. Since it expresses a ratio of two quantities with the same unit, it is a dimensionless, relative unit. A decibel is one tenth of a bel, a seldom-used unit. Typically dB has been employed in Audio Measurement and Fiber Optics among many uses.

Proper measurement of signal strength requires an absolute measurement and the dBm provides this measurement. Since it is referenced to the milliwatt, it is an absolute unit, used when measuring absolute power. By comparison, the decibel (dB) is used for quantifying the ratio between two values, such as signal-to-noise ratio

The Copperhead FS-790 Transceiver System operates within a defined range of Fiber Optic Link signal strength. The minimum recommended signal strength is -22 dBm or better. Typically the system should operate at levels between -7 dBm and -20 dBm. The standard Copperhead FS-790 laser output strength is -6 dBm. Cable length affects signal strength as does the number of connections between the Camera Unit and the Base Station. For example, using a Power Supply such as the MPS or HDX adds a minimal signal loss through each additional fiber optic connection.

The alphanumeric digital display on the Copperhead FS-790 Base Station provides direct signal strength measurements in dBm. These readouts also provide a wide range of diagnostic information. The use of the digital display is described below.

The CopperheadFS-790 Base Station Digital Display

The Base Station digital display has three functions selected by the Display Mode Selector (#14 on the Overview Diagram). These functions are indicated by the Display Mode LEDs.

1. BASE RX – Base Station Optical Power or Signal Strength that is being generated at the Base Station and sent to the Camera Unit. Displayed in units of –dBm.
2. CAM RX – Optical Power or Signal Strength generated by the Camera Unit as measured at the Base Station. Displayed in units of –dBm.
3. DIAG – One of four diagnostics modes available to the Base Station

   The system diagnostic measurement and display capabilities of the 4th Generation Copperhead Base Station have been greatly improved over previous incarnations. Vague error codes and cryptic 4-character messages, formerly seen on the front panel display, have been replaced by “marquee” style phrases that scroll across the display and define the various fault or status conditions. This feature allows the operator to quickly troubleshoot and correct fiber connectivity issues related to the Base Station or the Copperhead Camera Unit, as well as help to determine if there are operational parameters such as temperature or power supply related issues that require attention, maintenance or possibly repair of the unit. If any monitored parameter is found to be out of the desired range, the “ALARM” LED will light red to indicate that messages are available in diagnostics mode to help determine the cause of the issue; reducing troubleshooting down-time.

Operation:

The selection of a parameter to be viewed on the G4 Base Station front panel is initiated by pressing the small black "SELECT" push-button located directly below the 4 character display. Different functions are chosen based on the length of time the button is held in, as follows:

1. Quickly pressing and releasing the push-button will alternate the displayed readout between the optical power measured at the Base Station fiber port ("BASE RX", LED lights green) or the Copperhead Camera Unit fiber port ("CAM RX", LED lights green). The Base Station optical power is the default readout displayed when the unit is powered up.

2. Pressing and holding the push-button in for ≈2 seconds will initiate the diagnostics mode ("DIAG", LED lights green). Operational status of the complete system will then be presented. The first message displayed will always be the internal operating temperature of the Base Station, both in °C and °F (e.g. "Base Temp 25°C [pause] 77°F"). Immediately following the temperature readout, a status report of system operating conditions will be displayed. Following is a list of possible messages that can be displayed, with additional clarification:

a. "System Status OK" – Displayed when all monitored parameters are within appropriate limits and the system is fully functional. All status indicators on the Base Station front panel will also be green.

b. "Base Optical Rx Low!", "Base Optical Rx OVL!" – Displayed when the received optical power, measured at the Base Station fiber port, is not within the specified operating limits; "Low!" when below -22dBm, and "OVL!" when the optical receiver is being overdriven by an input >0dBm.

c. "Base Temp Too High" – Displayed when the internal operating temperature exceeds the limit where component reliability or operational stability could become affected.

d. "Base Voltage In Low", "Base Voltage In High" – Displayed when the DC input voltage being supplied to the rear panel XLR-4 or 2 terminal binding post is not in the specified 12VDC to 18VDC operating range; for DC powered versions of the Base Station only. If the Base Station is one of the AC Line powered versions, the necessary 12VDC is supplied to the mainboard by the internal AC to DC power supply and monitored by this same means.

e. "Base Current In High" – Displayed when DC input current exceeds the maximum specified rating. This indication, similar to the voltage measurement above, is derived from the DC voltage that powers the mainboard.

f. "Base [XXXX] PS Low", "Base [XXXX] PS High" – Displayed when one of the internal power supply rails has exceeded the specified design tolerance requirement. Monitored power supply rails include: "12AU", +12Vdc auxiliary - supplies internal cooling fans and power to pin 15 of the "DATA" connector on the Base Station rear panel (power for camera remote controls etc.). "12V", +12Vdc - supplies internal amplifiers and data switches; "5.2V", +5.2Vdc, supplies audio data converters, video amplifiers and various digital circuits; "3.3V", +3.3Vdc - supplies most logic devices on the main PCB; "1.2V", +1.2Vdc - supplies FPGA core; "1.2G", +1.2Vdc – supplies FPGA transceivers; "-5V", -5Vdc – supplies video amplifiers; "-12V", -12Vdc – supplies audio amplifiers and data switches.

g. "Base Multi PS Fail" – Displayed when more than one of the monitored voltages above has exceeded the specified design tolerance requirement. Factory service is undoubtedly required in such a case.

h. "Base Invalid Op Data" – Displayed when the data information contained in the optical stream is not a valid protocol for the Copperhead system. This can occur if the Base Station is inadvertently connected to a fiber optic transmission device other than the intended Copperhead Camera Unit.

i. “Base Fan Fail” – Displayed when the rotor of one or both fans either locks up by some mechanical obstruction, or the fan drive mechanism has failed completely.

j. “No Copperhead Unit” – Displayed when there is no indication that a Copperhead Camera Unit is attached to the remote end of the fiber optic cable.

k. “Alarm From Cam Unit” – Displayed when any of the monitored operating parameters in the Copperhead Camera Unit is not operating within specified limits. Typical indications would be from low, high, or invalid optical power, or internal power supply rail issues.

l. “Cam Optical Rx Low!”, “Cam Optical Rx OVL!” – Displayed when the received optical power, measured at the Copperhead Camera Unit fiber port, is not within the specified operating limits; “Low!” when below -22dBm, and “OVL!” when the optical receiver is being overdriven by an input >0dBm.

m. “Cam Invalid Op Data” – Displayed when the data information contained in the optical stream is not a valid protocol for the Copperhead system. This can occur if the Copperhead Camera Unit is inadvertently connected to a fiber optic transmission device other than the intended Copperhead Base Station.

After a brief delay to allow time to comprehend the information, the 4 character display will revert back to reading optical power for the Copperhead Camera Unit or Base Station, whichever device was being displayed at the time one of the diagnostic modes was accessed.

3. Pressing and holding the push-button in for a longer time period, ≈5 seconds, or until both °C and °F Base Temperature readings have been displayed, will initiate the secondary diagnostics mode (“DIAG” LED turns yellow). This diagnostic mode, most likely accessed far less often than the primary diagnostics mode, is for gathering information pertaining to the configuration of the two available intercom channels (configured by selecting any of five intercom port wiring options, see port programming section for intercom type selection) and also provides an indication of the current revision of installed firmware. Following is a list of possible messages that can be displayed, with additional clarification:

a. “Intercom Ch1: 4-wire”, “Intercom Ch2: 4-wire” – Displayed when both Intercom channels are configured for 4-wire operation.

b. “Intercom Ch1: RTS”, “Intercom Ch2: 4-wire” – Displayed when Intercom channel one is configured for an “RTS” style 2-wire system and channel two is configured for 4-wire operation.

c. “Intercom Ch1: ClCm”, “Intercom Ch2: 4-wire” – Displayed when Intercom channel one is configured for a “Clear-Com” style 2-wire system and channel two is configured for 4-wire operation.

d. “Intercom Ch1: RTS”, “Intercom Ch2: RTS” – Displayed when both Intercom channels are configured for “RTS” style 2-wire system operation.

e. “Intercom Ch1: ClCm”, “Intercom Ch2: ClCm” – Displayed when both Intercom channels are configured for “Clear-Com” style 2-wire system operation.

f. “Firmware Rev. XXXX” - Displayed after intercom configuration information is presented. After a brief delay to allow time to comprehend the information, the 4 character display will revert back to reading optical power for the Copperhead Camera Unit or Base Station, whichever device was being displayed at the time one of the diagnostic modes was accessed.

4. The 4 character display will also indicate that an automatic nulling cycle is being performed when the “Auto Null” switch on the Base Station front panel is actuated for either intercom channel, which only applies if one or both of the intercom channels is (are) configured for “RTS” or ”Clear-Com” 2-wire operation. If an intercom channel is configured for 4-wire operation, actuation of the “Auto Null” switch for that channel will be ignored. Display is as follows:

a. "Null in Progress!!!!" – Displays when an automatic nulling cycle is initiated and in progress. Message scrolls continuously until the nulling process is complete (≈5-10 seconds). This message will override any other messages on the 4 character display when initiated. After a brief delay to allow time to comprehend the information, the 4 character display will revert back to reading optical power for the Copperhead Camera Unit or Base Station, whichever device was being displayed at the time one of the diagnostic modes was accessed.

To cycle between Base RX and Cam RX modes, push the Display Mode selector button quickly.

To enter Diagnostic mode, hold the Display Mode selector button for more than 5 seconds. Once in the Diagnostic mode, a quick push of the selector button cycles through the various diagnostic sub-modes described above.

The following table describes the expected readouts in each of the above Base Station display modes. By following the sequence you can understand what the various readouts and four character abbreviations mean for the system.

Display Mode	Typical Readout	Base Station Digital Display Activity Explanation
(assumes after initial power up – see Page 66 for a description of the Power Up sequence)		
		BOPT: Base Station Optical Receive Signal Strength
BASE RX	-9	Indicates that the Base Station received optical signal strength is -9 dBm.
BASE RX	BOPT	Indicates that the Display is showing Base Station optical signal strength.
BASE RX	-9	Repeat of the Base Station optical signal strength in dBm.
BASE RX	BOPT	Repeat that the display is showing Base Station optical signal strength.
		This display cycle repeats itself and depending on timing may start with either BOPT or the strength measurement.
		COPT: Camera Unit Optical Receive Signal Strength
CAM RX	COPT	Sequence starts with COPT to indicate Camera Unit optical signal strength.
CAM RX	-9	Indicates that the signal strength from the Camera Unit is -9 dBm.
CAM RX	COPT	Repeat of the display indicating Camera Unit optical signal strength.
CAM RX	-9	Repeat of the Camera Unit signal strength in dBm.
CAM RX	COPT	Repeat that the display is showing Optical link signal strength.
		This display cycle repeats itself and depending on timing may start with either OPT of the strength measurement – COPT does not reappear in the repeating cycle.

6.6. Standard Operation

The section is devoted to a number of "Best Practices" for use of the Copperhead FS-790 Transceiver System. Specific information on how to operate the system has been presented in the sections above.

1. Protect the Fiber Optic Cable and the Fiber Optic Connectors. **Always** keep these capped unless there are being connected.

2. Read the section on planning the Fiber Run – it may come in handy – Page 60.

3. Once the system is set up and running, do not ignore the Optical Power Signal Strength Readouts at either the Camera or the Base Station. While the Alarm functions of the system are very good, so is the tolerance for optical Signal Strength reduction. By monitoring –dBm levels you can take preventative action to stop a signal and possibly an On-Air or Recording loss. The system is, of course, digital and so the Signal Strength is either just good enough or usually much better than that. When it is no longer strong enough the signal stops.

4. If introducing new equipment (cameras, switchers, etc.) or new operators be sure to do a test run with everything as it will be during the actual production. Reading this User Guide is a good start but hands-on is the best way to understand how it will and more importantly what to do to insure proper operation.

5. If your production is a Multi-Camera shoot with Time Code synchronized between all cameras it is a good idea to periodically confirm that proper Time Code is being returned from the various cameras and that a switch has not been changed in error at a camera location.

6.7. Shutting Down the System

System shutdown is simple. The only cautions relate to the Fiber Cable and to the Base Station Remote Control Panel Cable.

1. To avoid the possibility of looking directly into an active fiber optic port or cable, turn both the Camera Unit and the Base Station off before disconnecting the fiber from either point.

2. To avoid the possibility of damaging the Camera Remote Control Panel, turn the Base Station off before disconnecting the Control Cable from the Control Panel or the Base Station.

3. Protect all cables from dirt, water entry and being dragged across the ground or other surface.

4. When re-spooling the cable take your time so as to avoid cable snags, crimps or damage to the connectors. Re-spool evenly across the reel.

5. If the Base Station is a permanent or semi-permanent installation then simply power off and disconnect and cap the Fiber Cable.

6.8. Troubleshooting

Troubleshooting any technical issues with the Copperhead FS-790 Transceiver System is similar to any piece of television production gear with the obvious exception of the core Fiber Optic technology. Here is a list of things to look out for and check – some of them obvious but sometimes forgotten.

1. Check all your cables – any lost connections or bad connectors?

2. Confirm signal type is on the proper signal path. Though it is possible to physically connect analog signals to digital signal connectors on the Copperhead FS-790 Transceiver System, signals will not pass through the system unless they are the correct type. An SDI signal will not pass through the Analog or VBS paths and an Analog signal will not pass through an SDI path. If the wrong type of signal is incorrectly connected the signal monitor indicator may light up because an electrical voltage is present on the line but no signal will pass through.

3. Check your power – are the Power Supplies working?

4. If you are using the PowerWafer and the camera or Copperhead Camera Unit is not powering up, check the following:

    a. The PowerWafer cable is connected to the Camera Unit's PowerWafer jack.

    b. The indicators on the Base Station are all correct (see section 4.2)

    c. The fuse on the Base Station is not blown.

5. Take advantage of the various diagnostic tools provided in the Copperhead FS-790 Base Station and Camera Unit.

    a. Is the Fiber Optic Signal Strength within an acceptable range? The product specification calls for strength of -22 dBm or greater but the system will often work at strengths lower than this – though not guaranteed to do so – Use the Four Character Digital Display on the Base Station to check signal strength.

    b. Observe all of the LED warning and alarm lights on the Base Station and follow up based on what you observe.

    c. If signal strength is degraded from the time of system checkout at a particular location, walk the Fiber Cable and see that it is in intact and has no damage of severe bends or kinks.

6. If the digital display indicates an error code you should contact Grass Valley Technical Support to assist in diagnosing the problem. Note the exact error code so you can report it to the support technician. In general, field repair is not usually possible if one of these rare error messages is displayed.

Appendices

Appendix 1. Connector Pin Assignments

1.1. Copperhead FS-790 Base Station Connectors

Reference Numbers Refer to the Overview Diagrams in Appendix 4 at the End of this User Guide

Camera Remote – Base Station DB9 Connector -Wiring

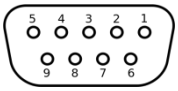

Base Station #3

Pin	Function
1	- Camera Control Data Input
2	Not Used
3	Camera Control Data Ground (Shield)
4	Not Used
5	- Camera Control Data Output
6	+ Camera Control Data Input
7	- 12 VDC Camera Control Data Power Ground
8	+12 VDC Camera Control Data Power
9	+ Camera Control Data Output

Table 5 - Base Station Camera Remote Connector Wiring

Tally/GPI/Data – Base Station DB15 Connector Wiring

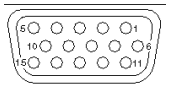

Base Station #4

Pin	Function
1	Not used
2	Not used
3	Not used
4	GPI 1 / Red Tally In
5	GND
6	NA
7	GND
8	Not used
9	GPI 2 / Green Tally In
10	Not used
11	Not used
12	Not used
13	Not used
14	Not used
15	Not used

Table 6 - Base Station Tally/GPI Connector Wiring

This cable is end-user supplied.

Base Station Audio Inputs & Outputs Connector Wiring

Base Station #14 & #15

Audio In #15	Audio Out #16	Channel	DB25 Pin Number		
			Hot	Cold	Ground
Return Audio 1 In	Cam Audio 1 Out	1	24	12	25
Not Used	Cam Audio 2 Out	2	10	23	11
Not Used	Not Used	3	21	9	22
Not Used	Not Used	4	7	20	8
Not Used	Not Used	5	18	6	19
Not Used	Not Used	6	4	17	5
Intercom CH 1 In	Intercom CH 1 Out	7	15	3	16
Not Used	Not Used	8	1	14	2
		Not Connected	13		

Table 7 - Base Station Audio 25 Pin Connector Wiring

This cable is end-user supplied. Please see Appendix 3, page 80 for suggested wiring configurations

Power Connector – Base Station 4 Pin XLR Connector Wiring

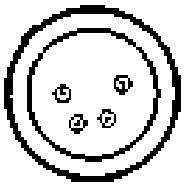

Base Station #17

Pin	Function
1	Ground
2	Unused
3	Unused
4	+ Power 12 VDC

Table 8 - Base Station Power Connector Wiring

This matching connector is from either an ADAP-AC-02 or a customer 12VDC camera power supply

Power Connector – Base Station Fused AC Receptacle

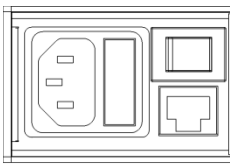

Base Station #1

Panel Mounted AC Power Receptacle: 110/220 VAC

Two 4 amp fuses (5 x 20mm).fuses are in operation at all times
– both the AC Line Hot and the AC Line Neutral are fused.

Replacement: Littlefuse 218.

Base Station 12VDC Terminal Block Wiring

Base Station #18

Pin	Function
1	Minus Voltage Terminal
2	Plus Voltage Terminal

Table 9 - Base Station 12VDC Terminal Block Wiring

This cable is end-user supplied

Base Station Intercom Modes

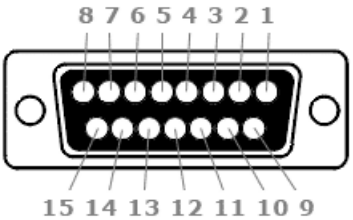

GND Pins 3, 7, or 11. NC – no connection.

Mode	DB15		Functionality	
	Pin 8	Pin 15	Channel 1	Channel 2
1	NC	NC	4-wire	
2	Tied together		RTS	4-wire
3	NC	GND	Clear-Com	4-wire
4	GND	NC	RTS	
5	GND	GND	Clear-Com	

1.2. Copperhead FS-790 Camera Unit Multi-Pin Connectors

Power Wafer – Camera Unit 4 Pin Lemo Connector Wiring

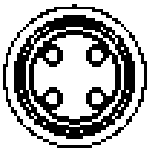

Camera Unit #8

Pin	Signal
1	95VDC +
2	95 VDC -
3	Not Used
4	Not Used

Table 10 - Camera Unit Power Wafer Connector Wiring

Supplied with Power Wafer

Camera Headset – Camera Unit 5 Pin XLR Female Connector Wiring

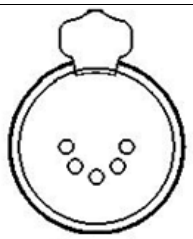

Camera Unit #6

Pin	Function
1	MIC Ground (shield)
2	+ MIC Input
3	- Earphone Output Ground
4	+ Earphone Output
5	+ Earphone Output

Table 11 - Camera Unit Headset Connector Wiring

This cable is end-user supplied

Audio Out

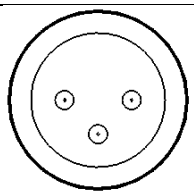

Camera Unit #4

Pin	Function
1	Chassis ground (cable shield)
2	Positive polarity terminal ("hot")
3	Return terminal ("cold")

Table 12 - Standard XLR3 Audio Connector Wiring

This cable is end-user supplied

Appendix 2. Base Station Remote Control Cable

Figure 25 - Copperhead JVC FP-790 Series Base Station Remote Cable

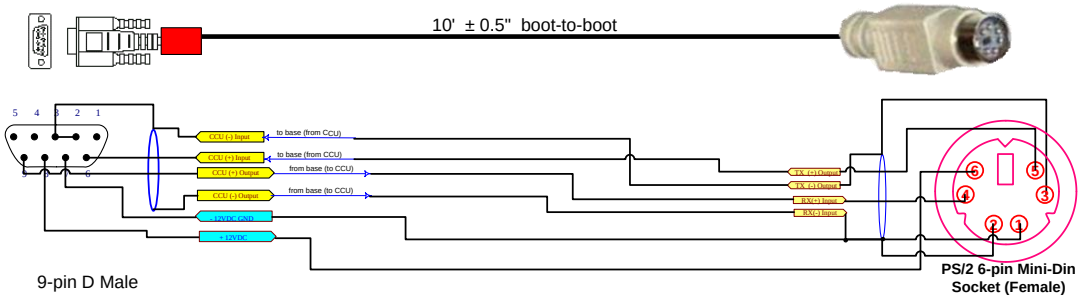

9-pin D Male

1	CCU (-) Input	1
2	CCU Format Select	2
3	Ground (CCU shields)	3
4	+12VDC Bias (for CCU Format Select only)	4
5	CCU (-) Output	5
6	CCU (+) Input or Bi-directional CCU I/O	6
7	12VDC CCU Power - Ground	7
8	+12VDC CCU Power	8
9	CCU (+) Output	9

6-pin Mini DIN Female

1	SIGNAL GND	
2	REMOTE/LOCAL (detect of *HOST*)	Bring to TTL "LOW" to control camera
3	SIGNAL GND	
4	SID RX DATA	
5	SID TX DATA	
6	9 VDC IN (+)	

RM-LP25

RM-LP55

RM-LP57

Appendix 3. Audio Cable Wiring Suggestions

Copperhead FS-790 Base Station 25-Pin Audio Input Cable

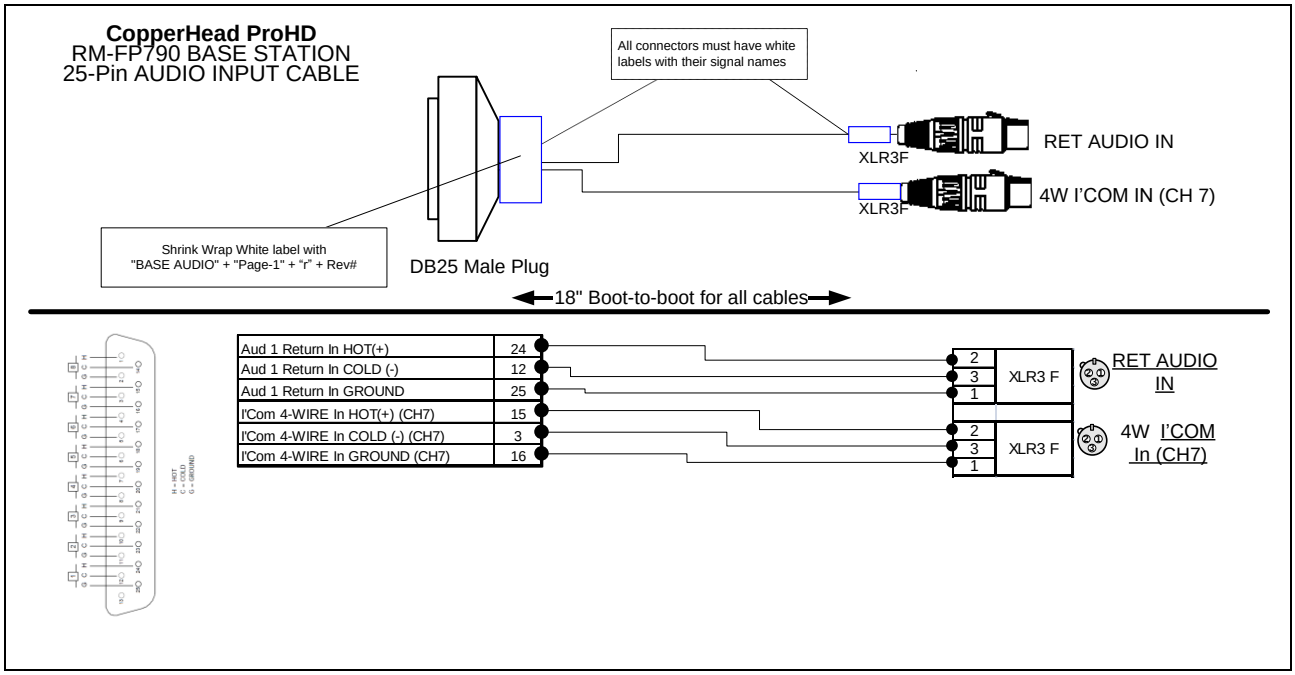

Figure 26 - Copperhead JVC FP-790 Series Base Station 25-Pin Audio Input Cable

Copperhead FS-790 Base Station 25-Pin Audio Output Cable

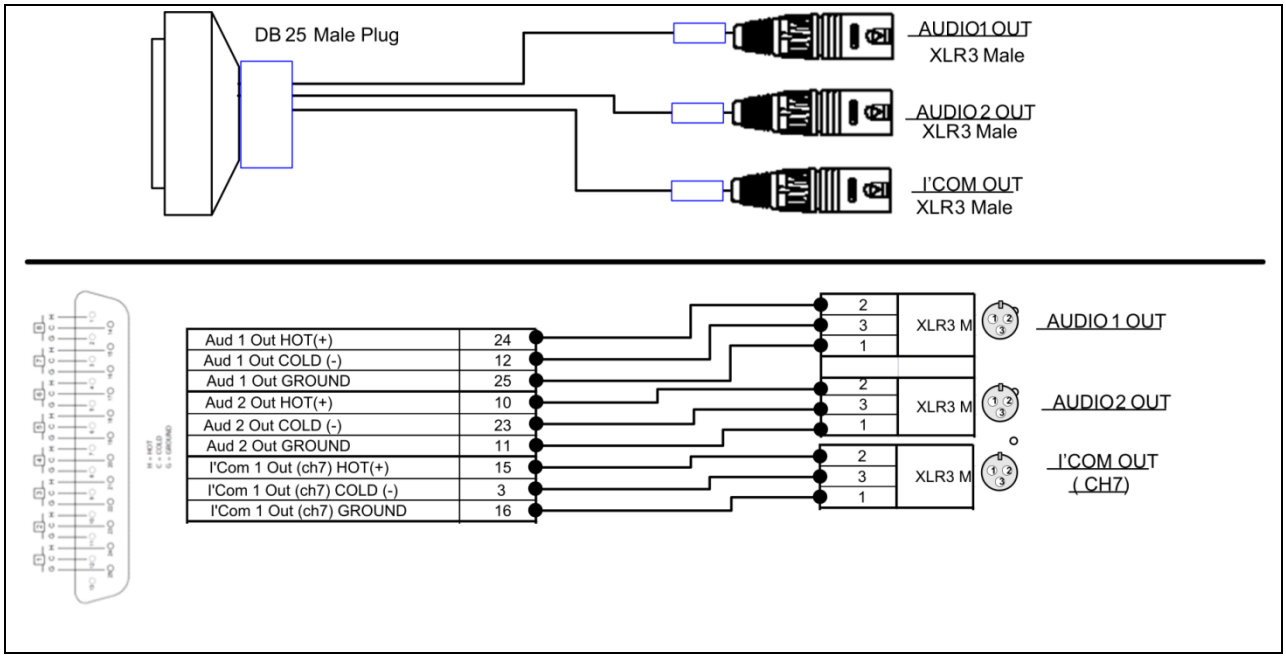

Figure 27 - Copperhead FS-790 Base Station 25-Pin Audio Output Cable

Appendix 4. Specification

Video, Digital (bi-directional)

Interface ..... SMPTE 259M, 292M
Data Rate .....270 Mb/s or 1.5 Gbits/s
Input Level .....800 mV (peak to peak)
Input/output Impedance..... 75 Ohms
Output Impedance ..... 75 Ohms
Bit-Error Rate (@ -22 dBm)..... 10-12
Jitter (pathological data).....< 0.2 UI
Rise/Fall Times ..... < 270 ps

Video, Analog (bi-directional)

Interface .....RS170, NTSC, PAL
Frequency Response
30 Hz-4.2 MHz..... ±0.15 dB
8MHz .....-3 dB
Video Signal to Noise Ratio .....≥ 72 dB
Differential Gain ..... < 2%
Differential Phase.....< 1°

Audio

Number of Channels..... 1-to-2
Type .....Balanced, line level
Impedance ..... >15K Ω
Maximum Input Level..... 24 dBu
Quantization.....24 bits, 128x (oversampled)
Sample Rate 48kS/sec
Frequency Response..... ±0.1 dB, 20 Hz to 20 KHz

Intercom

Number or channels 1
Interface types (Base)..... RTS, Clear-Com or Four-Wire
Frequency Response.....200 - 18KHz ± 3dB
Max Distortion ..... <= 0.5%
Noise .....< -60dBu
Max Gain (RTS or Clear-Com) .....>= 24dB
Min Gain (RTS or Clear-Com).....<= -45dB

Electro-Optical

Operating Wavelengths .....1310 nm/
TX Laser output power (std./opt) ..... -6 dBm/0 dBm
RX Sensitivity, HD/SDI .....-22 dBm
Fiber Compatibility .....Single Mode
Optical Connector Options - Camera Unit:
Local Power ..... MX or OpticalCON
Remote Power:
Short Range Power..... SMPTE 304M or
.....OpticalCON
Long Range Power .....SMPTE 304M
Optical Connector Options - Base Station:
Unpowered (Tac fiber) ..... ST or OpticalCON
Remote Power (Hybrid fiber):
Standard Power .....SMPTE 304M,
..... OpticalCON, or STs & Molex

Distance Limit *[see note below]

Tactical Fiber (Local Power at Camera)**:**
Standard laser ..... 15db optical loss (≈ 5 km*)
Optional DFB laser..... 19db optical loss (≈ 30 km*)
SMPTE 311M Hybrid Fiber:
Standard Internal Power Supply w/PowerWafer
..... ≈ 240m (787 ft): 95W @ 12VDC*
Long Range: HDX w/PowerPlus
..... ≈2km (6562 ft.): 100W Cont./150W Peak*

Mechanical/Environmental

Dimensions (WxLxD)
Camera Unit..... 2.5" x 6.5" x 2.2"
Base Station ..... 17.5" x 9" x 1.75"
Power Wafer ..... 5" x 6.12" x 2.2"
PowerPlus LP (100W) ..... 5" x 6" x 2.5"
PowerPlus HP (150W) ..... 5" x 6" x 3.7"
HDX..... 13" x 3.5" x 8.5"
Weight
Camera Unit.....1.5 lb.
Base Station .....5.0 lb.
PowerWafer .....1.5 lb.
PowerPlus ..... LP: 2.3 lb.....HP: 2.5 lb.
HDX.....10.5 lb.
Power Consumption
Camera unit..... 8 watts@10-18VDC
Base Station (Tac Fiber): ..... 10 watts@10-18VDC
Power Connector..... 4-Pin XLR
Base Station (Hybrid Fiber):
Power Req.....110-120/220-240 VAC, 50 to 60Hz
Power Consumption.....250 watts max @120VAC

Temperature Range ..... -25° to +55°C
Humidity Range ..... 0 to 95% RH, Noncondensing

* The maximum cable length varies due to optical loss that can depend on cable quality, dirt/dust/contamination on connectors, and the number of cable connectors. When using hybrid cable for camera power, the size of the hybrid cable, as well as the power draw of the camera, lens, viewfinder, and other accessories are also factors.

Appendix 5. Declaration of Conformity

Telecast
Fiber Systems, Inc.
A BELDEN BRAND

DECLARATION OF CONFORMITY

We, Telecast Fiber System a Belden brand, declare under our sole responsibility that the product CopperHead G3 JVC, know under models KA-F790 and RM-FP790 to which this declaration relates is in conformity with the following standard(s) or other normative document(s):

- FCC, United States Federal Communications Commission Rules Part 15, Class A
- ICES-003, 2004, Industry Canada, Interference-Causing Equipment Standard, Digital Apparatus, Class A
- EN 55022, 2006, European Information technology equipment - Radio disturbance characteristics - Limits and methods of measurement, Class A
- VCCI, Japanese V-3/2009.04, Class A
- AS/NZS CISPR 22,2005, Australia/New Zealand Information technology equipment – Radio disturbance characteristics - Limits and methods of measurement, Class A
- EN61000-3-2, 2006, Limits for Harmonic Current Emissions
- EN61000-3-3, 1995, Section 3, with A2 (2005), Limitations of Voltage Fluctuations and Flicker in Low-Voltage Supply Systems for Equipment with Rated Current::; 16 Amps
- EN55024:1998 Information Technology Equipment – Immunity
  - Amendment A1:2001 Characteristics -Limits and Methods of Measurement
  - Amendment A2:2003
- EN61000-4-2 Electrostatic Discharge
- EN61000-4-3 Radiated Electromagnetic Fields
- EN61000-4-4 Electrical Fast Transient/Burst
- EN61000-4-5 Surge Immunity Requirements
- EN61000-4-6 Conducted Disturbances Induced By Radio-Frequency Fields
- EN61000-4-11 Voltage Dips, Short Interruptions and Voltage Variations Immunity Tests
- IEC/EN 60950-1:2006 with A11:2009, Information Technology Equipment – Safety – Part1: General Requirements

The Technical Construction File is maintained at:

Telecast Fiber System
102 Grove Street
Worcester MA, 01543
USA
Phone: 508-754-4858

The authorized representative located within the Community is:

Sebastian Mucha
Director of Product Development
Email: Sebastian.Mucha@belden.com
Phone: 508-754-4858
Fax: 508-752-1520
Date of issue: 01/03/2011
Place of issue: Worcester MA, USA

SEBASTIAN MUCHA

Page Intentionally Left Blank

Appendix 6. Copperhead FS-790 System Overview Diagrams

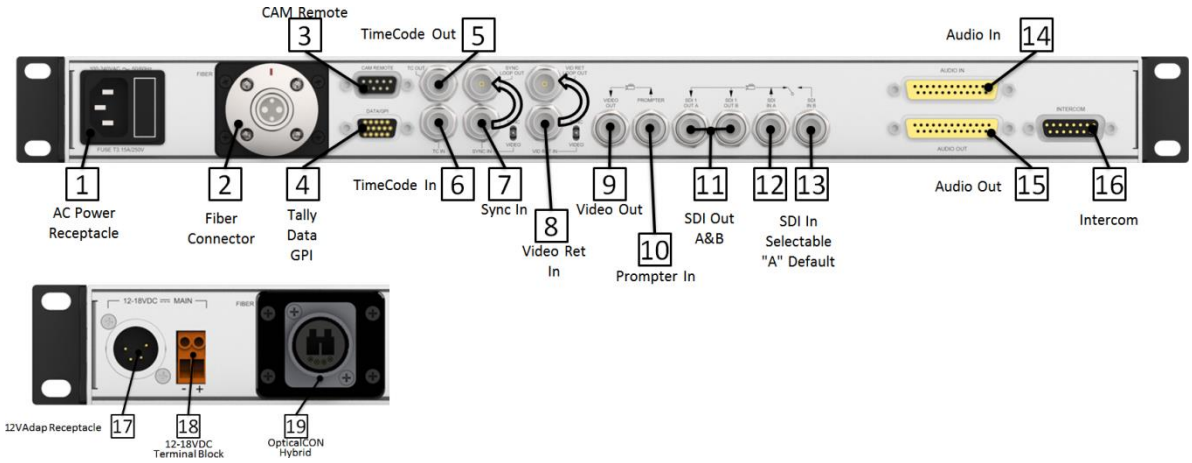

Figure 28 - Copperhead FS-790 Base Station Rear Panel

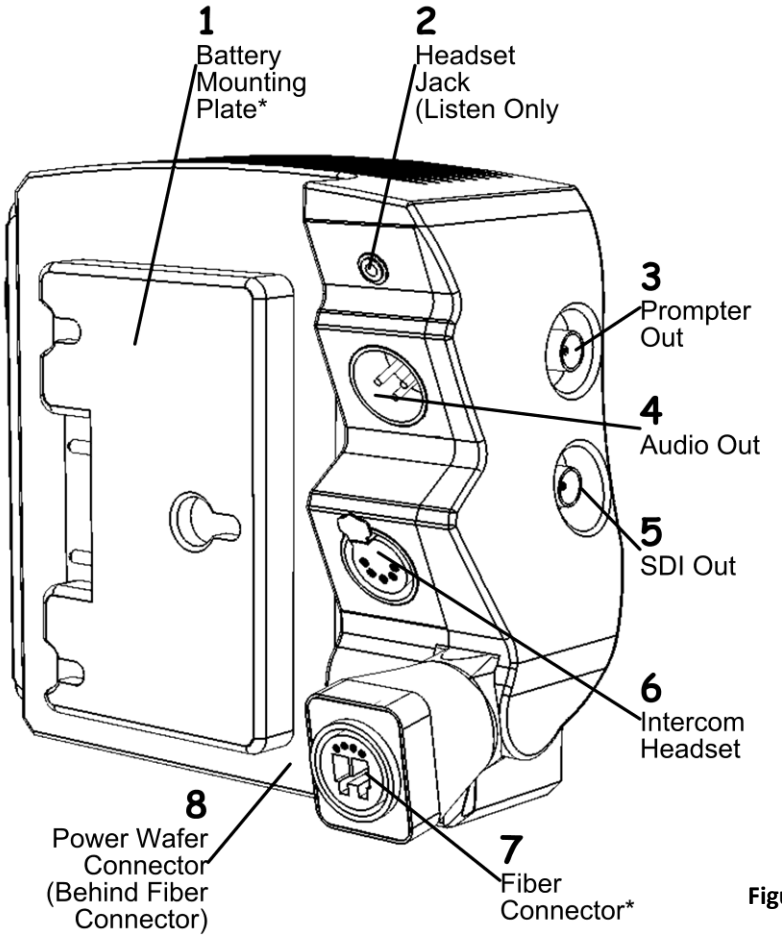

Figure 29 - Copperhead FS-790 Camera Unit Connectors

Page Intentionally Left Blank

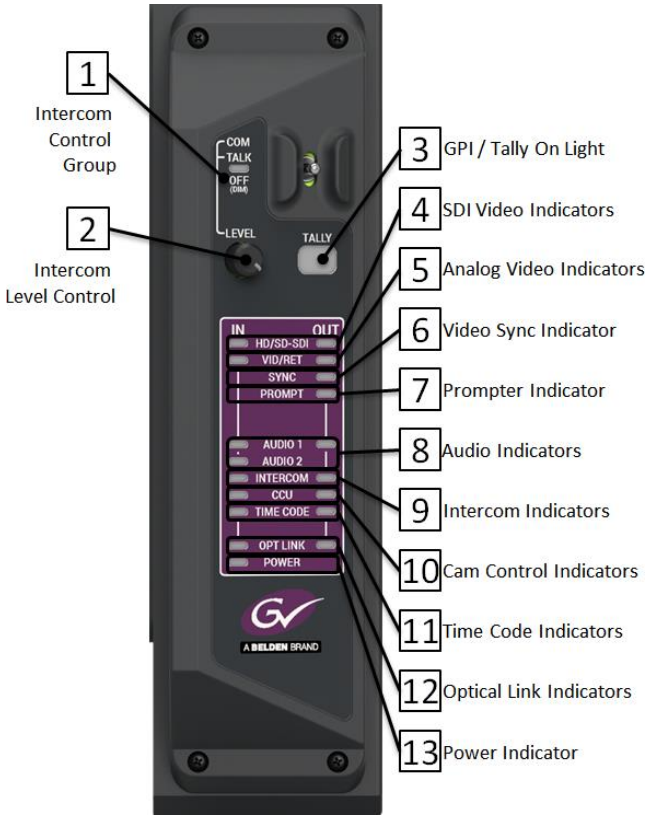

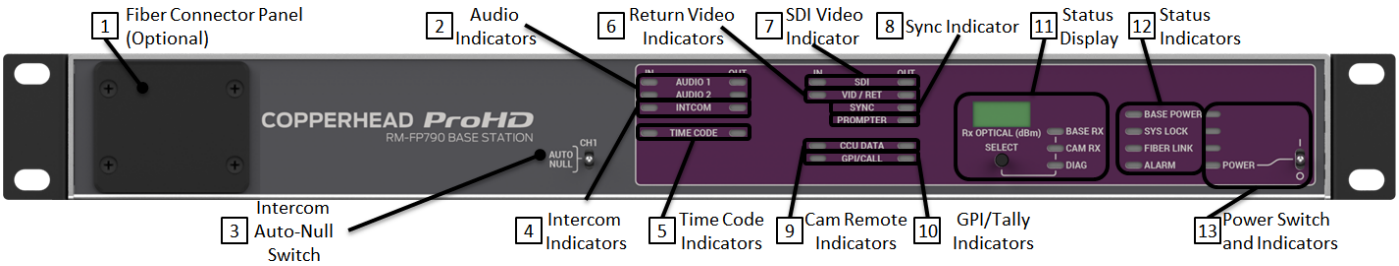

***Appears only on Powered Systems**

Figure 30 - Copperhead FS-790 Camera Unit Indicators and Controls

Figure 31 - Copperhead FS-790 Base Station Front Panel

©2017